INTERPUMP
FLUID SOLUTIONS

Powered by I.M.M. Hydraulics

Stainless Steel fittings

2020

Stainless Steel fittings

Standard tails

Inter-Lock tails

We have also available the following catalogues

Carbon Steel fittings

Hydraulic Hoses and Accessories

One-Piece fittings

Machines

MGQUIX

STANDARD TAILS

Index

Braided Trecciato

X001C — Swaged Ferrule (no skive) — 8

X0022 — Swaged Ferrule (no skive) — 9

X0001 — Swaged Ferrule (skive) — 10

X0002 — Swaged Ferrule (skive) — 11

XBMC1 — Swaged Ferrule (no skive) — 11

XBMC2 — Swaged Ferrule (no skive) — 12

Textile Tessile

X0003 — Swaged Ferrule (no skive) — 12

Thermoplastic

X0007 — Swaged Ferrule (no skive) — 13

X0008 — Swaged Ferrule (no skive) — 13

XPTFE — Ferrule for PTFE hose — 14

Spiral

X0009 — Swaged Ferrule (skive) — 14

X004H — Swaged Ferrule (skive) — 15

BSP flat

X0345 — BSP Male - Flat Seat — 15

X0061 — BSP Female Flat Seal — 16

X0062 — BSP Female Flat Seal Slip on Nut — 16

MALE BSP 60°

X0350 — BSP Male Parallel 60° cone — 17

BSP 60°

X0051 — BSP Female 60° Cone Crimped Nut — 18

X0052 — BSP Female 60° Cone Slip On Nut — 19

Dimensions and general characteristics may be changed at any time, data contained here in are only for information purpose only and it does not enlarge, amend or imply any warranty other than provided by us with the product. Any use of the product not in conformance with our instructions may be dangerous.

X0151

BSP 90° Swept elbow 60° cone - Crimped Nut

20

X0150

BSP 90° Swept Elbow 60° cone Thrust Wire

20

X0152

BSP 90° Swept elbow 60° cone Slip On Nut

21

X0251

BSP 45° Swept Elbow 60° Cone - Crimped Nut

22

X0250

BSP 45° Swept Elbow 60° Cone Thrust Wire Nut with O-Ring

22

X0252

BSP 45° Swept Elbow 60° Cone Slip On Nut

23

BSPT Gas Conico

X0360

BSP Taper Male 60° cone

24

BSP banjo/ bolt

X1400

BSP Banjo

25

X1600-00

BSP perfored bolt

25

X1600

Double BSP perfored bolt

26

NPTF / NPSM

X0370

NPTF Male 60° cone

27

MALE JIC 37°

X0850

JIC Male 74° cone

28

JIC 37°

X0901

JIC Female 74° cone Crimped Nut

29

X0902

JIC Female 74° cone Slip On Nut

30

X0951

JIC 90° Swept Elbow 74° cone - Crimped Nut

30

X0950

JIC 90° Swept Elbow 74° cone Thrust Wire

31

X0952

JIC 90° Swept Elbow 74° cone Slip on Nut

31

X1001

JIC 45° Swept Elbow 74° Cone - Crimped Nut

32

X1000

JIC 45° Swept Elbow 74° cone Thrust Wire

32

X1002

JIC 45° Swept Elbow 74° Cone Slip On Nut

33

Dimensions and general characteristics may be changed at any time, data contained here in are only for information purpose only and it does not enlarge, amend or imply any warranty other than provided by us with the product. Any use of the product not in conformance with our instructions may be dangerous.

Metric

X0400

Metric Male 60° cone

34

Metric Din 24° DKL

X0035

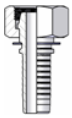

Metric Female 24° Seat Light Multiseal

35

X0135

90° Metric Swept Elbow 24° Seat Light Multiseal

36

X0235

45° Metric Swept Elbow 24° Seat Light Multiseal

36

Metric Din 24° CEL

X0500

Metric Male 24° Seat Light

37

Metric Din 24° DKOL

X0085

Metric Female 24° Seat Light

38

X0085

Metric Female 24° Seat Light Crimped Nut

39

X0185

90° Metric Swept Elbow 24° Seat Light

40

X0185

90° Metric Swept Elbow 24° Seat Light Crimped Nut

40

X0285

45° Metric Swept Elbow 24° Seat Light

41

X0285

45° Metric Swept Elbow 24° Seat Light Crimped Nut

41

Metric Din 24° CES

X0450

Metric Male 24° Seat Heavy

42

Metric Din 24° DKOS

X0084

Metric Female 24° Seat Heavy

43

X0184

90° Metric Swept Elbow 24° Seat Heavy

44

X0284

45° Metric Swept Elbow 24° Seat Heavy

45

Metric banjo/bolt

X1350

Metric Banjo

46

X1650

Metric perfored bolt

47

Metric standpipe

Dimensions and general characteristics may be changed at any time, data contained here in are only for information purpose only and it does not enlarge, amend or imply any warranty other than provided by us with the product. Any use of the product not in conformance with our instructions may be dangerous.

Metric Karcher

X0550

Metric Standpipe
48

X0650

90° Metric Standpipe
49

X0750

45° Metric Standpipe
50

XFK50

K' Female
51

ORFS Male

XS350

ORFS Male
52

ORFS crimped nut

XS050

ORFS Female
53

XS150

ORFS 90° Swept Elbow
54

XS250

ORFS 45° Swept Elbow
55

SAE 3000

X1260

Straight SAE Flange 3000 PSI
56

X1060

90° SAE Flange 3000 PSI
57

X1160

45° SAE Flange 3000 PSI
58

XS003
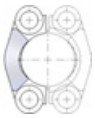
Cut Split Flanges - 3000 psi
58

SAE 6000

X1310

Straight SAE Flange 6000 PSI
59

X1110

90° SAE Flange 6000 PSI
60

X1210

45° SAE Flange 6000 PSI
61

XS006
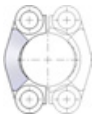
Cut Split Flanges - 6000 psi
62

Junction

XD050

Hose Junction
62

Dimensions and general characteristics may be changed at any time, data contained here in are only for information purpose only and it does not enlarge, amend or imply any warranty other than provided by us with the product. Any use of thre product not in conformance with our instructions may be dangerous.

X001C

Swaged Ferrule (no skive)

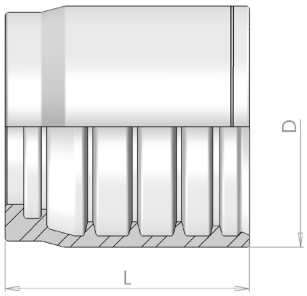

Part number	Hose I.D.		Dimensions		Skive Length
	in	mm	D	L	
X001C-03	3/16	4,8	19	24	NO
X001C-04	1/4	6.4	20	26	NO
X001C-05	5/16	7.9	22	26	NO
X001C-06	3/8	9.5	25	28	NO
X001C-08	1/2	12.7	28	28	NO
X001C-10	5/8	15.9	32	29	NO
X001C-12	3/4	19	36	38	NO
X001C-16	1	25.4	44	47.5	NO
X001C-20	1.1/4	31.8	54	56	NO
X001C-24	1.1/2	38.1	62	66	NO
X001C-32	2	50.8	75	73	NO
X001C-40	2.1/2	63.5	88.4	90	NO
X001C48	3	76.2	101.5	90	NO

X0022

Swaged Ferrule (no skive)

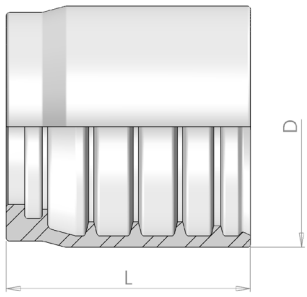

Part number	Hose I.D.		Dimensions		Skive Length
	in	mm	D	L	
X0022-03	3/16	4.8	21	25.3	NO
X0022-04	1/4	6.4	22	28	NO
X0022-05	5/16	7.9	24	28	NO
X0022-06	3/8	9.5	26	28	NO
X0022-08	1/2	12.7	30	31	NO
X0022-10	5/8	15.9	34	31	NO
X0022-12	3/4	19	38	38.5	NO
X0022-16	1	25.4	47	47.5	NO
X0022-20	1.1/4	31.8	58	56	NO
X0022-24	1.1/2	38.1	65.6	66	NO
X0022-32	2	50.8	78.6	73	NO

X0001

Swaged Ferrule (skive)

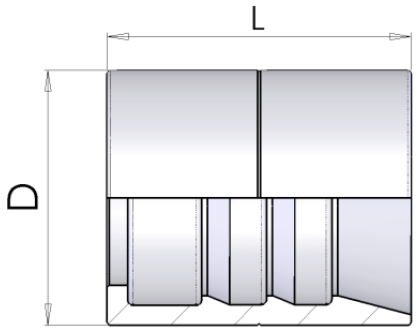

Part number	Hose I.D.		Dimensions		Skive Length
	in	mm	D	L	
X0001-03	3/16	4.8	17.5	27	20
X0001-04	1/4	6.4	20	30.2	23
X0001-05	5/16	7.9	22	30.7	23
X0001-06	3/8	9.5	24	32	24
X0001-08	1/2	12.7	28.5	34	25
X0001-10	5/8	15.9	32	37	27
X0001-12	3/4	19	36	43	31
X0001-16	1	25.4	43	50	37
X0001-20	1.1/4	31.8	52	57	46
X0001-24	1.1/2	38.1	57	63	44
X0001-32	2	50.8	70.6	78	60

X0002

Swaged Ferrule (skive)

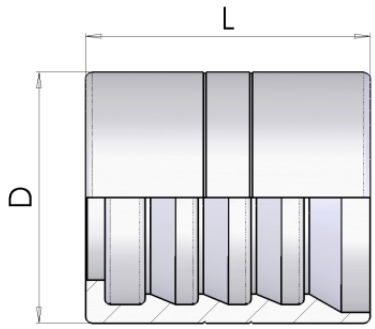

Part number	Hose I.D.		Dimensions		Skive Length
	in	mm	D	L	
X0002-03	3/16	4.8	20	27	21
X0002-04	1/4	6.4	21	30	22
X0002-05	5/16	7.9	24	30	22
X0002-06	3/8	9.5	25.4	32	24
X0002-08	1/2	12.7	30	34	25
X0002-10	5/8	15.9	34	37	27
X0002-12	3/4	19	38	43	31
X0002-16	1	25.4	46	50	37
X0002-20	1.1/4	31.8	56	59	43
X0002-24	1.1/2	38.1	62	63	45
X0002-32	2	50.8	75	79	61

XBMC1

Swaged Ferrule (no skive)

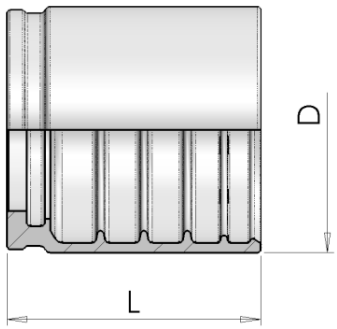

Part number	Hose I.D.		Dimensions		Skive Length
	in	mm	D	L	
XBMC1-12	3/4	19	45	41	NO
XBMC1-16	1	25.4	53.5	56	NO
XBMC1-20	1.1/4	31.8	62	62	NO

XBMC2

Swaged Ferrule (no skive)

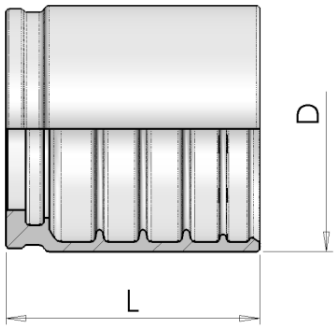

Part number	Hose I.D.		Dimensions		Skive Length
	in	mm	D	L	
XBMC2-20	1.1/4	31.8	66	62	NO
XBMC2-24	1.1/2	38.1	73.3	70	NO

X0003

Swaged Ferrule (no skive)

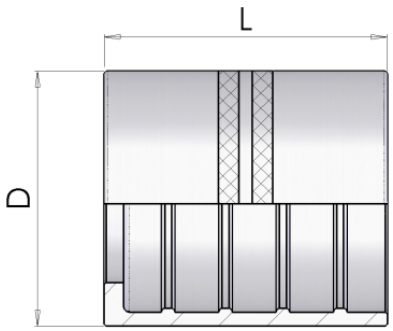

Part number	Hose I.D.		Dimensions		Skive Length
	in	mm	D	L	
X0003-03	3/16	4.8	14	27	NO
X0003-04	1/4	6.4	19	29	NO
X0003-05	5/16	7.9	22	30	NO
X0003-06	3/8	9.5	24	31	NO
X0003-08	1/2	12.7	28.5	34	NO
X0003-10	5/8	15.9	32	36	NO
X0003-12	3/4	19	38	42	NO
X0003-16	1	25.4	46	50	NO
X0003-20	1.1/4	31.8	52	57	NO

X0007

Swaged Ferrule (no skive)

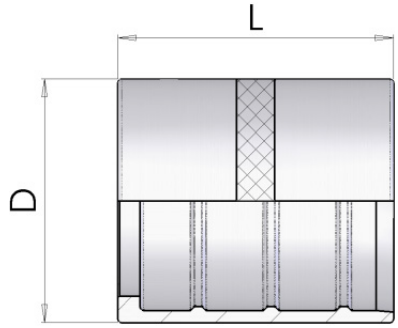

Part number	Hose I.D.		Dimensions		Skive Length
	in	mm	D	L	
X0007-03	3/16	4.8	14	27	NO
X0007-04	1/4	6.4	17	29	NO
X0007-05	5/16	7.9	19	30	NO
X0007-06	3/8	9.5	21	31	NO
X0007-08	1/2	12.7	25.4	34	NO
X0007-10	5/8	15.9	28.5	36	NO
X0007-12	3/4	19	32	36	NO
X0007-16	1	25.4	40	50	NO

X0008

Swaged Ferrule (no skive)

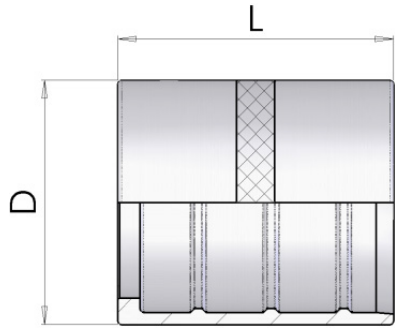

Part number	Hose I.D.		Dimensions		Skive Length
	in	mm	D	L	
X0008-03	3/16	4.8	13	27	NO
X0008-04	1/4	6.4	17	29	NO
X0008-05	5/16	7.9	19	30	NO
X0008-06	3/8	9.5	21.5	31	NO
X0008-08	1/2	12.7	26	34	NO
X0008-10	5/8	15.9	29	40	NO
X0008-12	3/4	19	32	42	NO
X0008-16	1	25.4	40	50	NO

XPTFE

Ferrule for PTFE hose

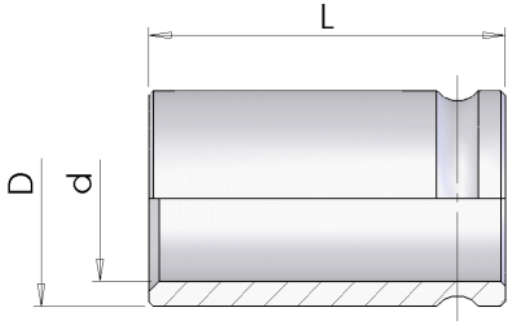

Part number	Hose I.D.		Dimensions		Skive Length
	in	mm	D	L	
XPTFE-03	3/16	4.8	9.5	22	NO
XPTFE-04	1/4	6.4	11.1	23.9	NO
XPTFE-05	5/16	7.9	13	24.6	NO
XPTFE-06	3/8	9.5	15	27.4	NO
XPTFE-08	1/2	12.7	18.3	28.7	NO
XPTFE-10	5/8	15.9	23.1	31.7	NO
XPTFE-12	3/4	19	24.8	34.5	NO
XPTFE-16	1	25.4	34.3	43.6	NO

X0009

Swaged Ferrule (skive)

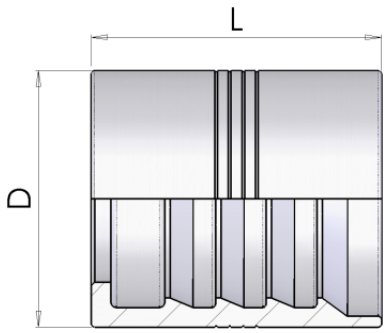

Part number	Hose I.D.		Dimensions		Skive Length
	in	mm	D	L	
X0009-04	1/4	6.4	15.3	30	22
X0009-06	3/8	9.5	18.3	33.5	26
X0009-08	1/2	12.7	22	36	28
X0009-10	5/8	15.9	25.7	40	31
X0009-12	3/4	19	29.4	43	34
X0009-16	1	25.4	36.1	60	48
X0009-20	1.1/4	31.8	46.7	66	54
X0009-24	1.1/2	38.1	55.7	76.5	62
X0009-32	2	50.8	68.8	79.8	64

X004H

Swaged Ferrule (skive)

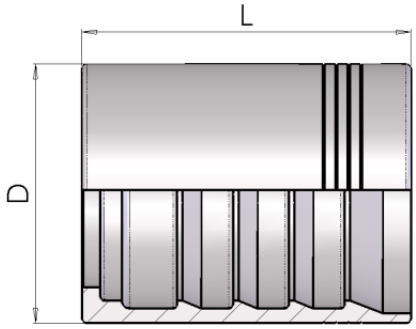

Part number	Hose I.D.		Dimensions		Skive Length
	in	mm	D	L	
X004H-20	1.1/4	31.8	43	66	55
X004H-24	1.1/2	38.1	50.4	76.5	63
X004H-32	2	50.8	65.5	79.8	65

X0345

BSP Male - Flat Seat

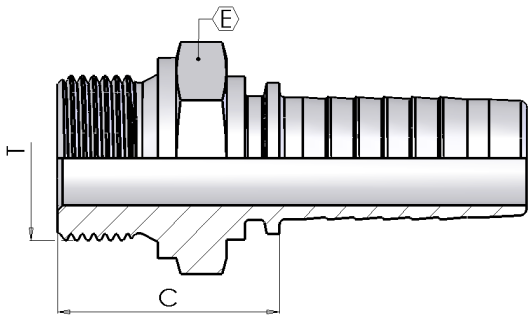

Part number	Hose I.D.		Dimensions			
			dash	Thread	Cut-Off	Hex
	in	mm	size	T	C	E
X0345-03-02	3/16	4.8	03	1/8-28	21	14
X0345-04-04	1/4	6.4	04	1/4-19	27	19
X0345-04-06	1/4	6.4	04	3/8-19	28	22
X0345-05-06	5/16	7.9	05	3/8-19	28	22
X0345-06-06	3/8	9.5	06	3/8-19	29	22
X0345-06-08	3/8	9.5	06	1/2-14	32	27
X0345-08-08	1/2	12.7	08	1/2-14	33	27
X0345-08-10	1/2	12.7	08	5/8-14	35	30
X0345-08-12	1/2	12.7	08	3/4-14	35	32
X0345-10-10	5/8	15.9	10	5/8-14	35	30
X0345-10-12	5/8	15.9	10	3/4-14	35	32
X0345-12-12	3/4	19	12	3/4-14	36	32
X0345-12-16	3/4	19	12	1-11	39	41
X0345-16-16	1	25.4	16	1-11	40	41

X0061

BSP Female Flat Seal

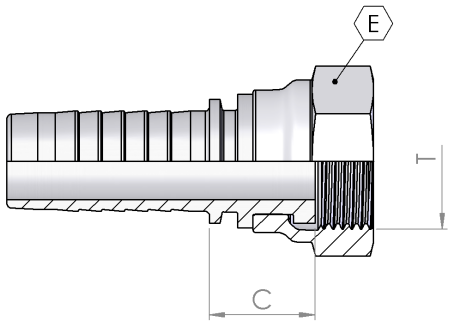

Part number	Hose I.D.		Dimensions			
			dash	Thread	Cut-Off	Hex
	in	mm	size	T	C	E
X0061-08-12	1/2	12.7	08	3/4-14	23	32
X0061-10-10	5/8	15.9	10	5/8-14	16	30
X0061-10-12	5/8	15.9	10	3/4-14	20	32
X0061-12-12	3/4	19	12	3/4-14	21	32
X0061-12-16	3/4	19	12	1-11	23	38
X0061-16-16	1	25.4	16	1-11	22	38
X0061-24-24	1.1/2	38.1	24	1.1/2-11	27	55

X0062

BSP Female Flat Seal - Slip on Nut

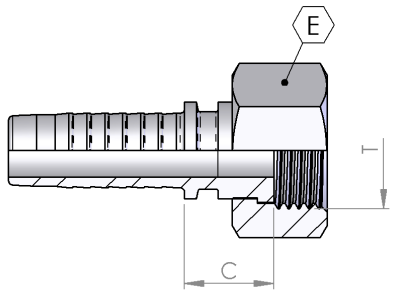

Part number	Hose I.D.		Dimensions			
			dash	Thread	Cut-Off	Hex
	in	mm	size	T	C	E
X0062-04-04	1/4	6.4	04	1/4-19	14	19
X0062-04-06	1/4	6.4	04	3/8-19	15	22
X0062-05-06	5/16	7.9	05	3/8-19	15	22
X0062-06-06	3/8	9.5	06	3/8-19	15	22
X0062-06-08	3/8	9.5	06	1/2-14	16	27
X0062-08-08	1/2	12.7	08	1/2-14	16	27

X0350

BSP Male Parallel 60° Cone

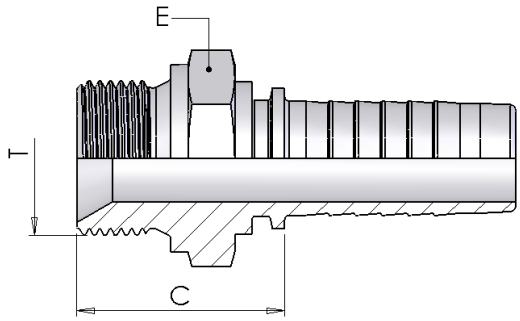

Part number	Hose I.D.		Dimensions			
			dash	Thread	Cut-Off	Hex
	in	mm	size	T	C	E
X0350-03-02	3/16	4.8	03	1/8-28	21	14
X0350-03-04	3/16	4.8	03	1/4-19	26	19
X0350-04-02	1/4	6.4	04	1/8-28	21	14
X0350-04-04	1/4	6.4	04	1/4-19	27	19
X0350-04-06	1/4	6.4	04	3/8-19	28	22
X0350-04-08	1/4	6.4	04	1/2-14	35	27
X0350-05-04	5/16	7.9	05	1/4-19	27	19
X0350-05-06	5/16	7.9	05	3/8-19	28	22
X0350-05-08	5/16	7.9	05	1/2-14	32	27
X0350-06-04	3/8	9.5	06	1/4-19	27	19
X0350-06-06	3/8	9.5	06	3/8-19	29	22
X0350-06-08	3/8	9.5	06	1/2-14	32	27
X0350-08-06	1/2	12.7	08	3/8-19	29	22
X0350-08-08	1/2	12.7	08	1/2-14	33	27
X0350-08-10	1/2	12.7	08	5/8-14	34	30
X0350-08-12	1/2	12.7	08	3/4-14	35	32
X0350-10-08	5/8	15.9	10	1/2-14	33	27
X0350-10-10	5/8	15.9	10	5/8-14	35	30
X0350-10-12	5/8	15.9	10	3/4-14	35	32
X0350-12-12	3/4	19	12	3/4-14	36	32
X0350-12-16	3/4	19	12	1-11	39	41
X0350-16-16	1	25.4	16	1-11	40	41
X0350-16-20	1	25.4	16	1.1/4-11	44	50
X0350-20-16	1.1/4	31.8	20	1-11	41	41
X0350-20-20	1.1/4	31.8	20	1.1/4-11	45	50
X0350-20-24	1.1/4	31.8	20	1.1/2-11	46	55
X0350-24-24	1.1/2	38.1	24	1.1/2-11	46	55
X0350-24-32	1.1/2	38.1	24	2-11	54	70
X0350-32-24	2	50.8	32	1.1/2-11	50	65
X0350-32-32	2	50.8	32	2-11	54	70

X0051

BSP Female 60° Cone - Crimped Nut

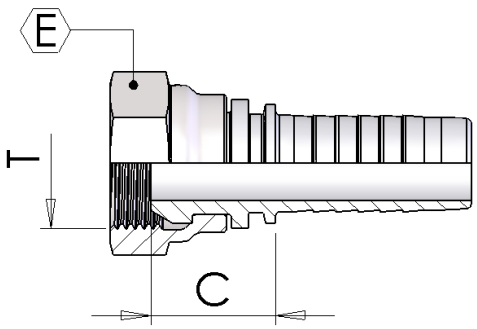

Part number	Hose I.D.		Dimensions			
			dash	Thread	Cut-Off	Hex
	in	mm	size	T	C	E
X0051-03-02	3/16	4.8	03	1/8-28	15	14
X0051-04-02	1/4	6.4	04	1/8-28	15	14
X0051-04-08	1/4	6.4	04	1/2-14	22	27
X0051-05-04	5/16	7.9	05	1/4-19	17	19
X0051-06-04	3/8	9.5	06	1/4-19	17	19
X0051-08-06	1/2	12.7	08	3/8-19	20	22
X0051-08-10	1/2	12.7	08	5/8-14	20	30
X0051-08-12	1/2	12.7	08	3/4-14	27	32
X0051-10-08	5/8	15.9	10	1/2-14	23	27
X0051-10-10	5/8	15.9	10	5/8-14	20	30
X0051-10-12	5/8	15.9	10	3/4-14	25	32
X0051-12-08	3/4	19	12	1/2-14	24	27
X0051-12-12	3/4	19	12	3/4-14	25	32
X0051-12-16	3/4	19	12	1-11	26	38
X0051-16-12	1	25.4	16	3/4-14	27	32
X0051-16-16	1	25.4	16	1-11	27	38
X0051-20-20	1.1/4	31.8	20	1.1/4-11	33	50
X0051-24-24	1.1/2	38.1	24	1.1/2-11	33	70
X0051-32-32	2	50.8	32	2-11	54	70

X0052

BSP Female 60° Cone - Slip On Nut

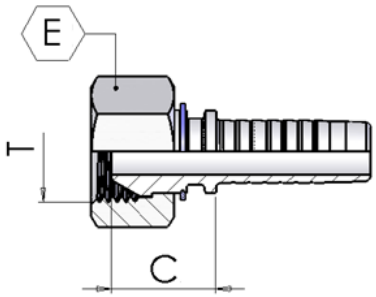

Part number	Hose I.D.		Dimensions			
			dash	Thread	Cut-Off	Hex
	in	mm	size	T	C	E
X0052-03-04	3/16	4.8	03	1/4-19	17	19
X0052-04-04	1/4	6.4	04	1/4-19	17	19
X0052-04-06	1/4	6.4	04	3/8-19	19	22
X0052-05-06	5/16	7.9	05	3/8-19	19	22
X0052-05-08	5/16	7.9	05	1/2-14	22	27
X0052-06-06	3/8	9.5	06	3/8-19	17	22
X0052-06-08	3/8	9.5	06	1/2-14	22	27
X0052-08-08	1/2	12.7	08	1/2-14	21	27

X0151

BSP 90° Swept elbow 60° Cone - Crimped Nut

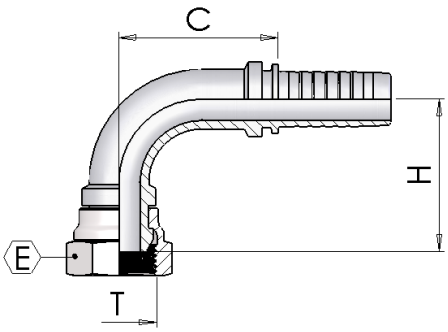

Part number	Hose I.D.		Dimensions				
			dash	Thread	Cut-Off	Hex	Drop
	in	mm	size	T	C	E	H
X0151-03-02	3/16	4,8	03	1/8-28	22	14	23
X0151-04-02	1/4	6.4	04	1/8-28	25	14	25
X0151-05-04	5/16	7.9	05	1/4-19	31	19	31
X0151-06-04	3/8	9.5	06	1/4-19	31	19	33
X0151-08-06	1/2	12.7	08	3/8-19	39	22	42
X0151-08-10	1/2	12.7	08	5/8-14	40	30	41
X0151-08-12	1/2	12.7	08	3/4-14	41	32	46
X0151-10-10	5/8	15.9	10	5/8-14	43	30	43
X0151-10-12	5/8	15.9	10	3/4-14	45	32	50
X0151-12-12	3/4	19	12	3/4-14	58	32	57
X0151-12-16	3/4	19	12	1-11	56	38	60
X0151-16-16	1	25.4	16	1-11	70	38	67

X0150

BSP 90° Swept Elbow 60° Cone - Thrust Wire

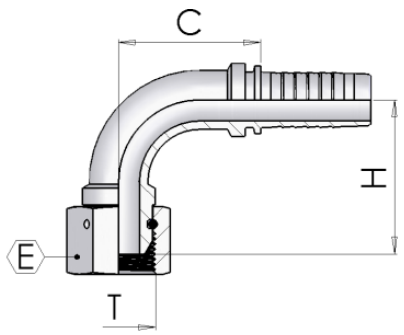

Part number	Hose I.D.		Dimensions				
			dash	Thread	Cut-Off	Hex	Drop
	in	mm	size	T	C	E	H
X0150-20-20	1.1/4	31.8	20	1.1/4-11	86	50	81
X0150-24-24	1.1/2	38.1	24	1.1/2-11	103	55	95
X0150-32-32	2	50.8	32	2-11	122	70	135

X0152

BSP 90° Swept elbow 60° Cone - Slip On Nut

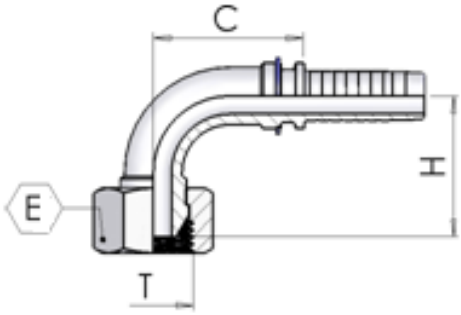

Part number	Hose I.D.		Dimensions				
			dash	Thread	Cut-Off	Hex	Drop
	in	mm	size	T	C	E	H
X0152-03-04	3/16	4.8	03	1/4-19	22	19	22
X0152-04-04	1/4	6.4	04	1/4-19	25	17	27
X0152-04-06	1/4	6.4	04	3/8-19	27	22	25
X0152-05-06	5/16	7.9	05	3/8-19	29	22	35
X0152-06-06	3/8	9.5	06	3/8-19	42	22	31
X0152-06-08	3/8	9.5	06	1/2-14	31	27	40
X0152-08-08	1/2	12.7	08	1/2-14	42	27	41

X0251

BSP 45° Swept Elbow 60° Cone - Crimped Nut

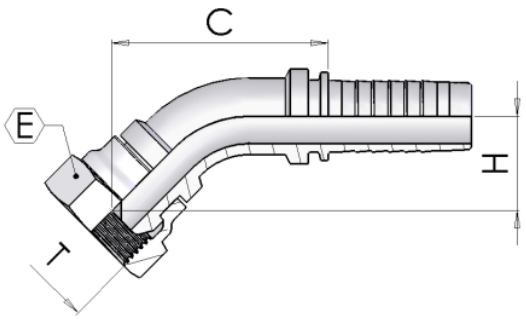

Part number	Hose I.D.		Dimensions				
			dash	Thread	Cut-Off	Hex	Drop
	in	mm	size	T	C	E	H
X0251-03-02	3/16	4.8	03	1/8-28	33	14	15
X0251-04-02	1/4	6.4	04	1/8-28	40	14	14
X0251-05-04	5/16	7.9	05	1/4-19	47	19	16
X0251-06-04	3/8	9.5	06	1/4-19	50	19	16
X0251-08-06	1/2	12.7	08	3/8-19	63	22	22
X0251-08-10	1/2	12.7	08	5/8-14	64	30	21
X0251-08-12	1/2	12.7	08	3/4-14	67	32	26
X0251-10-08	5/8	15.9	10	1/2-14	68	27	24
X0251-10-10	5/8	15.9	10	5/8-14	68	30	23
X0251-10-12	5/8	15.9	10	3/4-14	72	32	27
X0251-12-12	3/4	19	12	3/4-14	86	32	30
X0251-12-16	3/4	19	12	1-11	88	38	32
X0251-16-16	1	25.4	16	1-11	107	38	35

X0250

BSP 45° Swept Elbow 60° Cone - Thrust Wire Nut with O-Ring

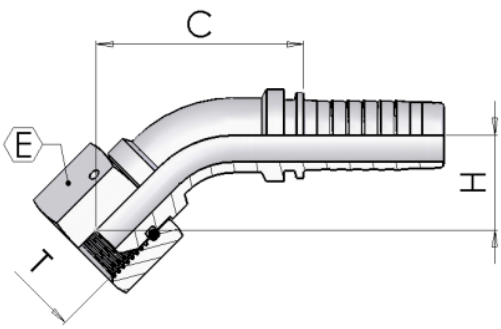

Part number	Hose I.D.		Dimensions				
			dash	Thread	Cut-Off	Hex	Drop
	in	mm	size	T	C	E	H
X0250-20-20	1.1/4	31.8	20	1.1/4-11	107	50	40
X0250-24-24	1.1/2	38.1	24	1.1/2-11	117	55	47
X0250-32-32	2	50.8	32	2-11	142	70	65

X0252

BSP 45° Swept Elbow 60° Cone - Slip On Nut

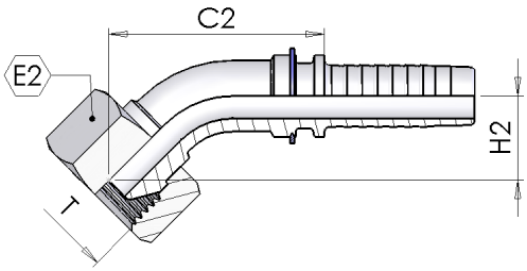

Part number	Hose I.D.		Dimensions				
			dash	Thread	Cut-Off	Hex	Drop
	in	mm	size	T	C	E	H
X0252-03-04	3/16	4.8	03	1/4-19	35	19	15
X0252-04-04	1/4	6.4	04	1/4-19	41	19	15
X0252-04-06	1/4	6.4	04	3/8-19	44	22	18
X0252-05-06	5/16	7.9	05	3/8-19	51	22	19
X0252-06-06	3/8	9.5	06	3/8-19	49	22	15
X0252-06-08	3/8	9.5	06	1/2-14	55	27	21
X0252-08-08	1/2	12.7	08	1/2-14	61	27	19

X0360

BSP Taper Male 60° Cone

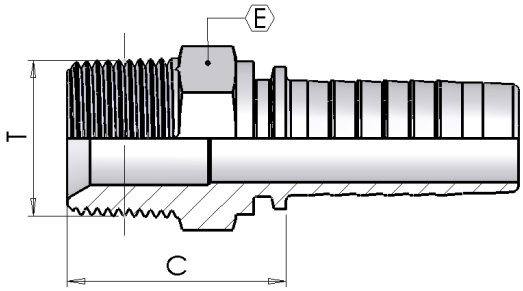

Part number	Hose I.D.		Dimensions			
			dash	Thread	Cut-Off	Hex
	in	mm	size	T	C	E
X0360-03-02	3/16	4.8	03	1/8-28	21	12
X0360-03-04	3/16	4.8	03	1/4-19	27	15
X0360-04-02	1/4	6.4	04	1/8-28	22	12
X0360-04-04	1/4	6.4	04	1/4-19	28	15
X0360-04-06	1/4	6.4	04	3/8-19	28	19
X0360-05-04	5/16	7.9	05	1/4-19	28	15
X0360-05-06	5/16	7.9	05	3/8-19	28	19
X0360-06-04	3/8	9.5	06	1/4-19	28	17
X0360-06-06	3/8	9.5	06	3/8-19	28	19
X0360-06-08	3/8	9.5	06	1/2-14	33	22
X0360-08-06	1/2	12.7	08	3/8-19	29	19
X0360-08-08	1/2	12.7	08	1/2-14	34	22
X0360-08-12	1/2	12.7	08	3/4-14	36	27
X0360-10-08	5/8	15.9	10	1/2-14	34	22
X0360-10-10	5/8	15.9	10	5/8-14	35	24
X0360-10-12	5/8	15.9	10	3/4-14	36	27
X0360-12-12	3/4	19	12	3/4-14	37	27
X0360-12-16	3/4	19	12	1-11	43	36
X0360-16-16	1	25.4	16	1-11	44	36
X0360-16-20	1	25.4	16	1.1/4-11	46	46
X0360-20-20	1.1/4	31.8	20	1.1/4-11	47	46
X0360-20-24	1.1/4	31.8	20	1.1/2-11	49	50
X0360-24-24	1.1/2	38.1	24	1.1/2-11	49	50
X0360-24-32	1.1/2	38.1	24	2-11	55	65
X0360-32-32	2	50.8	32	2-11	55	65

X1400

BSP Banjo

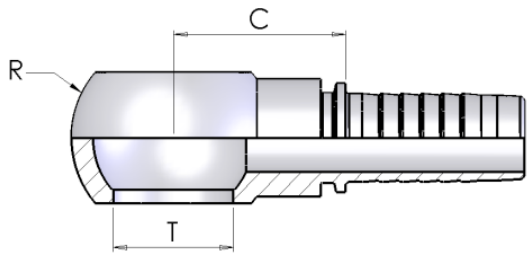

Part number	Hose I.D.		Dimensions			
			dash		Cut-Off	
	in	mm	size	mm	C	R
X1400-04-04	1/4	6.4	04	13.3	26	24
X1400-04-06	1/4	6.4	04	17	26	28
X1400-05-06	5/16	7.9	05	17	26	28
X1400-06-06	3/8	9.5	06	17	26	28
X1400-06-08	3/8	9.5	06	21.2	31	36
X1400-08-08	1/2	12.7	08	21.2	31	36
X1400-12-12	3/4	19	12	26.5	38	45
X1400-16-16	1	25.4	16	33.5	50	58

X1600-00

BSP perfored bolt

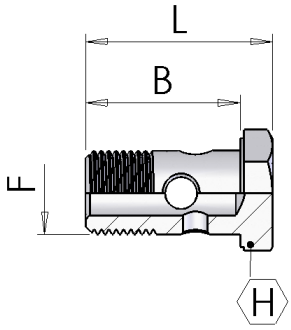

Part number	Dimensions			
				Drop
	B	F	L	H
X1600-00-02	19	1/8”-28	24	14
X1600-00-04	29	1/4”-19	34	19
X1600-00-06	33	3/8”-19	41	22
X1600-00-08	38	1/2”-14	46	27
X1600-00-12	47	3/4”-14	56	32
X1600-00-16	58	1”-11	69	41

X1600

Double BSP perfored bolt

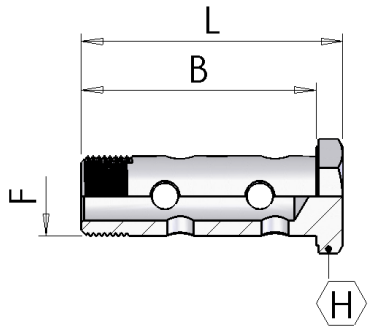

Part number	Dimensions			
				Drop
	B	F	L	H
X1600-04-04	43	1/4”-19	49	19
X1600-06-06	49	3/8”-19	57	22
X1600-08-08	62	1/2”-14	70	27
X1600-12-12	78	3/4”-14	87	32
X1600-16-16	98	1”-11	109	41

X0370

NPTF Male 60° Cone

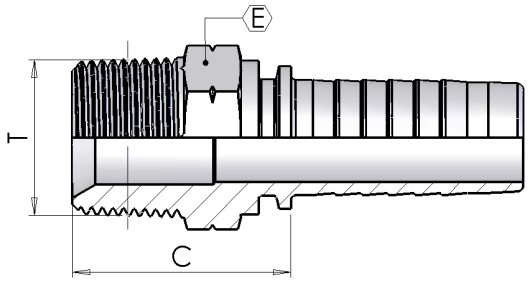

Part number	Hose I.D.		Dimensions			
			dash	Thread	Cut-Off	Hex
	in	mm	size	T	C	E
X0370-03-02	3/16	4.8	03	1/8-27	22	12
X0370-03-04	3/16	4.8	03	1/4-18	27	15
X0370-04-02	1/4	6.4	04	1/8-27	22	12
X0370-04-04	1/4	6.4	04	1/4-18	28	15
X0370-04-06	1/4	6.4	04	3/8-18	28	19
X0370-05-04	5/16	7.9	05	1/4-18	28	15
X0370-05-06	5/16	7.9	05	3/8-18	28	19
X0370-05-08	5/16	7.9	05	1/2-14	34	22
X0370-06-04	3/8	9.5	06	1/4-18	28	17
X0370-06-06	3/8	9.5	06	3/8-18	28	19
X0370-06-08	3/8	9.5	06	1/2-14	34	22
X0370-08-06	1/2	12.7	08	3/8-18	29	19
X0370-08-08	1/2	12.7	08	1/2-14	35	22
X0370-08-12	1/2	12.7	08	3/4-14	36	27
X0370-10-08	5/8	15.9	10	1/2-14	35	24
X0370-10-12	5/8	15.9	10	3/4-14	36	27
X0370-12-08	3/4	19	12	1/2-14	36	24
X0370-12-12	3/4	19	12	3/4-14	37	27
X0370-12-16	3/4	19	12	1-11.1/2	43	36
X0370-16-16	1	25.4	16	1-11.1/2	44	36
X0370-16-20	1	25.4	16	1.1/4-11.1/2	46	46
X0370-20-16	1.1/4	31.8	20	1-11.1/2	45	41
X0370-20-20	1.1/4	31.8	20	1.1/4-11.1/2	47	46
X0370-24-24	1.1/2	38.1	24	1.1/2-11.1/2	49	50
X0370-32-32	2	50.8	32	2-11.1/2	55	65

X0850

JIC Male 74° Cone

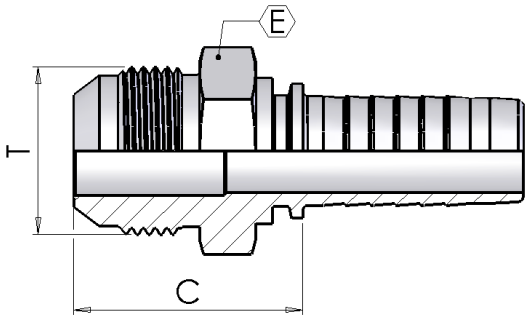

Part number	Hose I.D.		Dimensions			
			dash	Thread	Cut-Off	Hex
	in	mm	size	T	C	E
X0850-03-04	3/16	4.8	03	7/16-20	26	12
X0850-04-04	1/4	6.4	04	7/16-20	27	12
X0850-04-05	1/4	6.4	04	1/2-20	27	14
X0850-04-06	1/4	6.4	04	9/16-18	27	15
X0850-05-05	5/16	7.9	05	1/2-20	27	14
X0850-05-06	5/16	7.9	05	9/16-18	27	15
X0850-05-08	5/16	7.9	05	3/4-16	30	19
X0850-06-06	3/8	9.5	06	9/16-18	27	15
X0850-06-07	3/8	9.5	06	5/8-18	30	17
X0850-06-08	3/8	9.5	06	3/4-16	30	19
X0850-06-10	3/8	9.5	06	7/8-14	34	24
X0850-08-06	1/2	12.7	08	9/16-18	28	19
X0850-08-08	1/2	12.7	08	3/4-16	31	19
X0850-08-10	1/2	12.7	08	7/8-14	35	24
X0850-08-12	1/2	12.7	08	1.1/16-12	37	27
X0850-10-10	5/8	15.9	10	7/8-14	35	24
X0850-10-12	5/8	15.9	10	1.1/16-12	37	27
X0850-12-10	3/4	19	12	7/8-14	36	24
X0850-12-12	3/4	19	12	1.1/16-12	38	27
X0850-12-14	3/4	19	12	1.3/16-12	41	32
X0850-12-16	3/4	19	12	1.5/16-12	42	34
X0850-12-20	3/4	19	12	1.5/8-12	45	42
X0850-16-12	1	25.4	16	1.1/16-12	39	27
X0850-16-14	1	25.4	16	1.3/16-12	42	32
X0850-16-16	1	25.4	16	1.5/16-12	43	34
X0850-16-20	1	25.4	16	1.5/8-12	46	42
X0850-20-20	1.1/4	31.8	20	1.5/8-12	47	42
X0850-20-24	1.1/4	31.8	20	1.7/8-12	52	50
X0850-24-24	1.1/2	38.1	24	1.7/8-12	52	50
X0850-32-32	2	50.8	32	2.1/2-12	62	65

X0901

JIC Female 74° Cone Crimped Nut

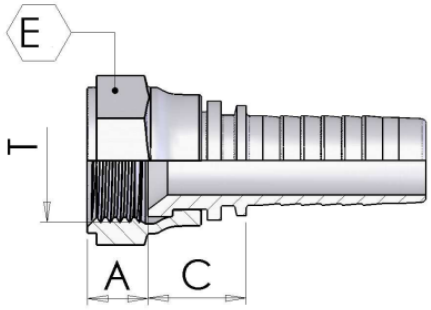

Part number	Hose I.D.		Dimensions				
			dash	Thread	Cut-Off		Hex
	in	mm	size	T	C	A	E
X0901-03-04	3/16	4.8	03	7/16-20	14	9	15
X0901-04-04	1/4	6.4	04	7/16-20	14	9	15
X0901-04-07	1/4	6.4	04	5/8-18	17	11	22
X0901-05-05	5/16	7.9	05	1/2-20	15	10	17
X0901-05-07	5/16	7.9	05	5/8-18	17	9	22
X0901-06-04	3/8	9.5	06	7/16-20	15	9	15
X0901-06-05	3/8	9.5	06	1/2-20	15	10	17
X0901-06-06	3/8	9.5	06	9/16-18	16	9	19
X0901-06-07	3/8	9.5	06	5/8-18	16	11	22
X0901-08-08	1/2	12.7	08	3/4-16	18	11	24
X0901-10-10	5/8	15.9	10	7/8-14	19	13	27
X0901-12-10	3/4	19	12	7/8-14	20	13	27
X0901-12-12	3/4	19	12	1.1/16-12	22	14	32
X0901-12-14	3/4	19	12	1.3/16-12	23	14	36
X0901-12-16	3/4	19	12	1.5/16-12	21	16	38
X0901-16-12	1	25.4	16	1.1/16-12	23	14	32
X0901-16-16	1	25.4	16	1.5/16-12	24	16	38

X0902

JIC Female 74° Cone - Slip On Nut

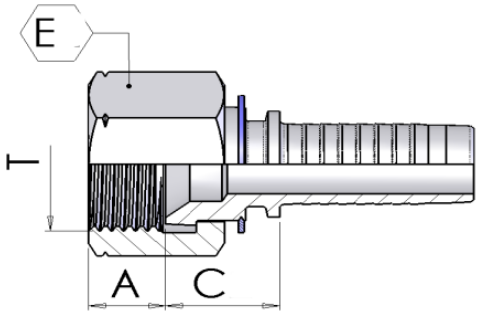

Part number	Hose I.D.		Dimensions				
			dash	Thread	Cut-Off		Hex
	in	mm	size	T	C	A	E
X0902-04-05	1/4	6.4	04	1/2-20	17	10	17
X0902-04-06	1/4	6.4	04	9/16-18	17	9	19
X0902-05-06	5/16	7.9	05	9/16-18	16	9	19
X0902-06-08	3/8	9.5	06	3/4-16	18	11	22
X0902-08-10	1/2	12.7	08	7/8-14	20	13	27
X0902-10-12	5/8	15.9	10	1.1/16-12	20	14	32

X0951

JIC 90° Swept Elbow 74° Cone - Crimped Nut

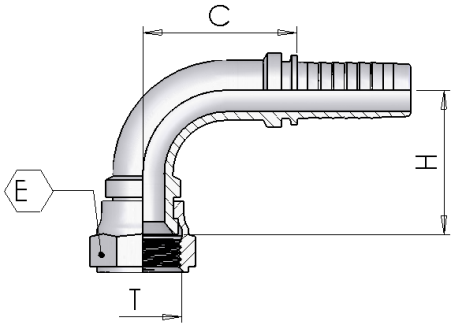

Part number	Hose I.D.		Dimensions				
			dash	Thread	Cut-Off	Hex	Drop
	in	mm	size	T	C	E	H
X0951-03-04	3/16	4.8	03	7/16-20	22	15	22
X0951-04-04	1/4	6.4	04	7/16-20	25	15	24
X0951-05-05	5/16	7.9	05	1/2-20	29	17	30
X0951-06-05	3/8	9.5	06	1/2-20	33	17	30
X0951-06-06	3/8	9.5	06	9/16-18	31	19	32
X0951-08-08	1/2	12.7	08	3/4-16	41	24	41
X0951-10-10	5/8	15.9	10	7/8-14	43	27	44
X0951-12-16	3/4	19	12	1.5/16-12	56	38	57
X0951-16-16	1	25.4	16	1.5/16-12	70	38	65

X0950

JIC 90° Swept Elbow 74° Cone - Thrust Wire

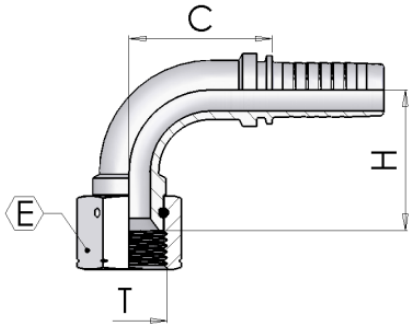

Part number	Hose I.D.		Dimensions				
			dash	Thread	Cut-Off	Hex	Drop
	in	mm	size	T	C	E	H
X0950-20-20	1.1/4	31.8	20	1.5/8-12	87	50	83
X0950-24-24	1.1/2	38.1	24	1.7/8-12	102	55	97
X0950-32-32	2	50.8	32	2.1/2-12	121	70	134

X0952

JIC 90° Swept Elbow 74° Cone - Slip on Nut

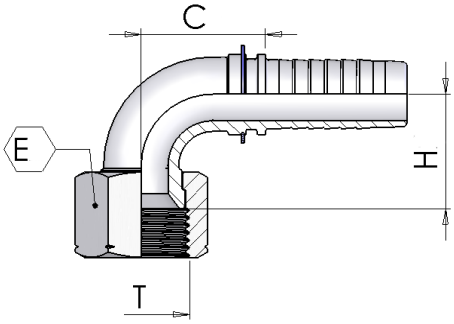

Part number	Hose I.D.		Dimensions				
			dash	Thread	Cut-Off	Hex	Drop
	in	mm	size	T	C	E	H
X0952-04-05	1/4	6.4	04	1/2-20	27	17	21
X0952-04-06	1/4	6.4	04	9/16-18	26	19	21
X0952-05-06	5/16	7.9	05	9/16-18	25	19	32
X0952-06-08	3/8	9.5	06	3/4-16	35	22	26
X0952-06-10	3/8	9.5	06	7/8-14	33	27	36
X0952-08-10	1/2	12.7	08	7/8-14	40	27	32
X0952-08-12	1/2	12.7	08	1.1/16-12	39	32	43
X0952-10-12	5/8	15.9	10	1.1/16-12	47	32	37
X0952-12-12	3/4	19	12	1.1/16-12	58	32	45

X1001

JIC 45° Swept Elbow 74° Cone - Crimped Nut

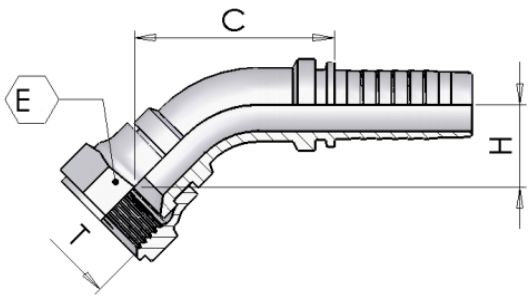

Part number	Hose I.D.		Dimensions				
			dash	Thread	Cut-Off	Hex	Drop
	in	mm	size	T	C	E	H
X1001-03-04	3/16	4.8	03	7/16-20	33	15	15
X1001-04-04	1/4	6.4	04	7/16-20	38	15	13
X1001-05-05	5/16	7.9	05	1/2-20	46	17	17
X1001-06-05	3/8	9.5	06	1/2-20	49	17	16
X1001-06-06	3/8	9.5	06	9/16-18	51	19	17
X1001-08-08	1/2	12.7	08	3/4-16	62	24	22
X1001-10-10	5/8	15.9	10	7/8-14	68	27	24
X1001-12-16	3/4	19	12	1.5/16-12	86	38	30
X1001-16-16	1	25.4	16	1.5/16-12	104	38	33

X1000

JIC 45° Swept Elbow 74° Cone - Thrust Wire

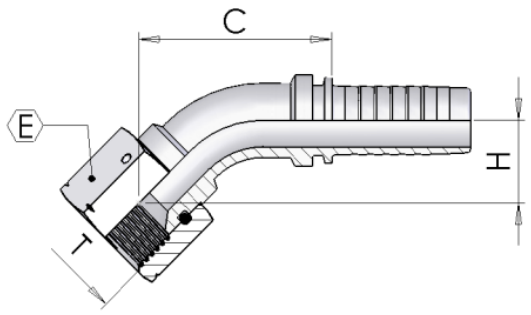

Part number	Hose I.D.		Dimensions				
			dash	Thread	Cut-Off	Hex	Drop
	in	mm	size	T	C	E	H
X1000-20-20	1.1/4	31,8	20	1.5/8-12	108	50	40
X1000-24-24	1.1/2	38,1	24	1.7/8-12	119	55	49
X1000-32-32	2	50,8	32	2.1/2-12	142	70	65

X1002

JIC 45° Swept Elbow 74° Cone - Slip On Nut

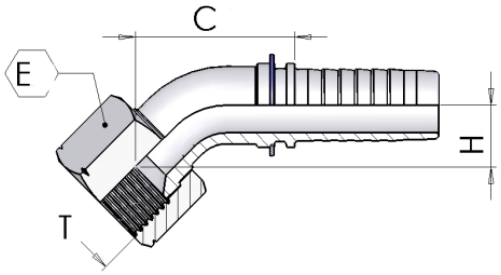

Part number	Hose I.D.		Dimensions				
			dash	Thread	Cut-Off	Hex	Drop
	in	mm	size	T	C	E	H
X1002-04-05	1/4	6.4	04	1/2-20	38	17	11
X1002-04-06	1/4	6.4	04	9/16-18	38	19	11
X1002-05-06	5/16	7.9	05	9/16-18	49	19	20
X1002-06-08	3/8	9.5	06	3/4-16	48	22	13
X1002-06-10	3/8	9.5	06	7/8-14	54	27	21
X1002-08-10	1/2	12.7	08	7/8-14	58	27	16
X1002-08-12	1/2	12.7	08	1.1/16-12	68	32	25
X1002-10-12	5/8	15.9	10	1.1/16-12	66	32	18
X1002-12-12	3/4	19	12	1.1/16-12	81	32	21

X0400

Metric Male 60° cone

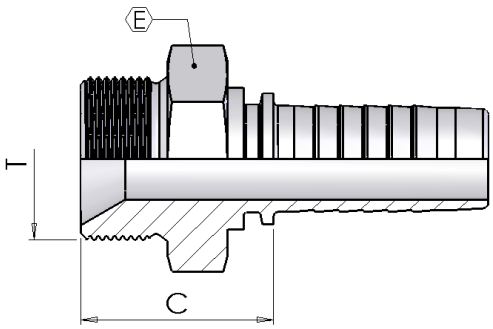

Part number	Hose I.D.		Dimensions			
			dash	Thread	Cut-Off	Hex
	in	mm	size	T	C	E
X0400-03-10	3/16	4.8	03	M10-1	19	14
X0400-03-12	3/16	4.8	03	M12-1.5	25	17
X0400-04-10	1/4	6.4	04	M10-1	20	14
X0400-04-12	1/4	6.4	04	M12-1.5	26	17
X0400-04-14	1/4	6.4	04	M14-1.5	26	19
X0400-04-16	1/4	6.4	04	M16-1.5	26	22
X0400-05-12	5/16	7.9	05	M12-1.5	26	17
X0400-05-16	5/16	7.9	05	M16-1.5	26	22
X0400-05-18	5/16	7.9	05	M18-1.5	26	24
X0400-06-14	3/8	9.5	06	M14-1.5	26	19
X0400-06-16	3/8	9.5	06	M16-1.5	26	22
X0400-06-18	3/8	9.5	06	M18-1.5	27	24
X0400-06-22	3/8	9.5	06	M22-1.5	27	27
X0400-08-18	1/2	12.7	08	M18-1.5	28	24
X0400-08-22	1/2	12.7	08	M22-1.5	30	27
X0400-10-26	5/8	15.9	10	M26-1.5	32	32
X0400-12-26	3/4	19	12	M26-1.5	33	32
X0400-12-30	3/4	19	12	M30-1.5	36	36
X0400-16-38	1	25.4	16	M38-1.5	37	46
X0400-20-45	1.1/4	31.8	20	M45-1.5	39	55

X0035

Metric Female 24°
- Seat Light Multiseal

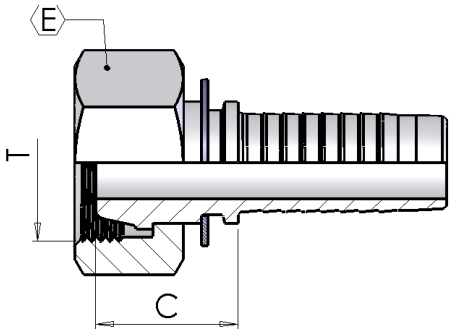

Part number	Hose I.D.		Dimensions				
			dash	Thread		Cut-Off	Hex
	in	mm	size	T	Erm	C	E
X0035-03-12	3/16	4.8	03	M12-1.5	6	19	14
X0035-03-16	3/16	4.8	03	M16-1.5	10	18	19
X0035-04-14	1/4	6.4	04	M14-1.5	8	19	17
X0035-04-16	1/4	6.4	04	M16-1.5	10	19	19
X0035-05-16	5/16	7.9	05	M16-1.5	10	19	19
X0035-05-18	5/16	7.9	05	M18-1.5	12	21	22
X0035-06-18	3/8	9.5	06	M18-1.5	12	23	22
X0035-06-22	3/8	9.5	06	M22-1.5	15	22	27
X0035-08-22	1/2	12.7	08	M22-1.5	15	22	27
X0035-08-26	1/2	12.7	08	M26-1.5	18	24	32
X0035-10-26	5/8	15.9	10	M26-1.5	18	24	32

X0135

90° Metric Swept Elbow 24° - Seat Light Multiseal

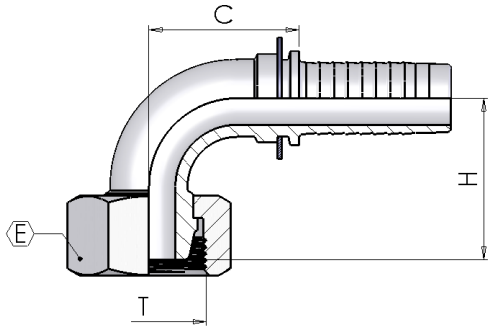

Part number	Hose I.D.		Dimensions					
			dash	Thread		Cut-Off	Hex	Drop
	in	mm	size	T	Erm	C	E	H
X0135-04-14	1/4	6.4	04	M14-1.5	8	25	17	25
X0135-04-16	1/4	6.4	04	M16-1.5	10	26	19	24
X0135-05-16	5/16	7.9	05	M16-1.5	10	32	19	29
X0135-05-18	5/16	7.9	05	M18-1.5	12	31	22	30
X0135-06-18	3/8	9.5	06	M18-1.5	12	32	22	33
X0135-06-22	3/8	9.5	06	M22-1.5	15	33	27	34
X0135-08-22	1/2	12.7	08	M22-1.5	15	41	27	38
X0135-10-26	5/8	15.9	10	M26-1.5	18	46	32	42

X0235

45° Metric Swept Elbow 24° - Seat Light Multiseal

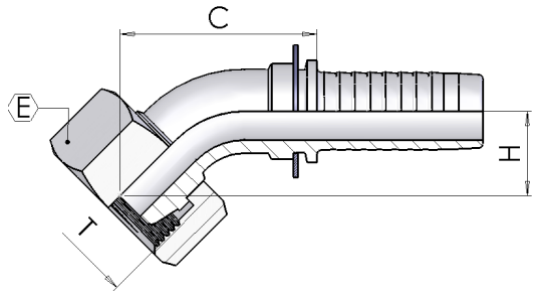

Part number	Hose I.D.		Dimensions					
			dash	Thread		Cut-Off	Hex	Drop
	in	mm	size	T	Erm	C	E	H
X0235-04-14	1/4	6.4	04	M14-1.5	8	40	17	14
X0235-04-16	1/4	6.4	04	M16-1.5	10	37	19	16
X0235-05-16	5/16	7.9	05	M16-1.5	10	47	19	14
X0235-05-18	5/16	7.9	05	M18-1.5	12	49	22	16
X0235-06-18	3/8	9.5	06	M18-1.5	12	50	22	16
X0235-08-22	1/2	12.7	08	M22-1.5	15	61	27	21

X0500

Metric Male 24° - Seat Light

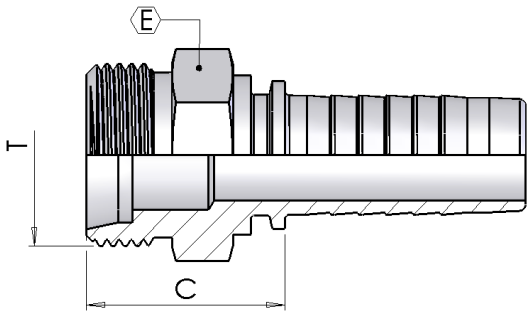

Part number	Hose I.D.		Dimensions				
			dash	Thread		Cut-Off	Hex
	in	mm	size	T	Erm	C	E
X0500-03-12	3/16	4.8	03	M12-1.5	6	22	14
X0500-04-12	1/4	6.4	04	M12-1.5	6	23	14
X0500-04-14	1/4	6.4	04	M14-1.5	8	22	14
X0500-04-16	1/4	6.4	04	M16-1.5	10	23	17
X0500-04-18	1/4	6.4	04	M18-1.5	12	24	19
X0500-05-14	5/16	7.9	05	M14-1.5	8	22	14
X0500-05-16	5/16	7.9	05	M16-1.5	10	23	17
X0500-05-18	5/16	7.9	05	M18-1.5	12	24	19
X0500-05-22	5/16	7.9	05	M22-1.5	15	25	22
X0500-06-16	3/8	9.5	06	M16-1.5	10	23	17
X0500-06-18	3/8	9.5	06	M18-1.5	12	24	19
X0500-06-22	3/8	9.5	06	M22-1.5	15	25	22
X0500-08-18	1/2	12.7	08	M18-1.5	12	25	19
X0500-08-22	1/2	12.7	08	M22-1.5	15	26	22
X0500-08-26	1/2	12.7	08	M26-1.5	18	27	27
X0500-10-22	5/8	15.9	10	M22-1.5	15	26	22
X0500-10-26	5/8	15.9	10	M26-1.5	18	27	27
X0500-10-30	5/8	15.9	10	M30-2	22	32	30
X0500-12-26	3/4	19	12	M26-1.5	18	28	27
X0500-12-30	3/4	19	12	M30-2	22	33	30
X0500-16-36	1	25.4	16	M36-2	28	32	36
X0500-20-45	1.1/4	31.8	20	M45-2	35	36	46
X0500-24-52	1.1/2	38.1	24	M52-2	42	38	55

X0085

Metric Female 24° - Seat Light

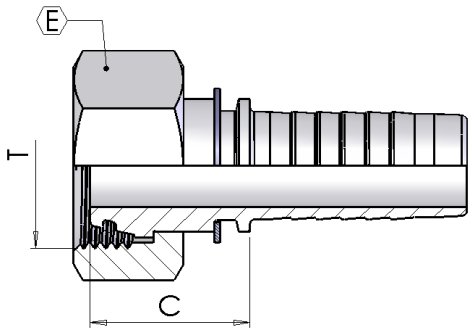

Part number	Hose I.D.		Dimensions				
			dash	Thread		Cut-Off	Hex
	in	mm	size	T	Erm	C	E
X0085-03-12	3/16	4.8	03	M12-1.5	6	23	14
X0085-04-14	1/4	6.4	04	M14-1.5	8	24	17
X0085-04-16	1/4	6.4	04	M16-1.5	10	24	19
X0085-04-18	1/4	6.4	04	M18-1.5	12	25	22
X0085-05-16	5/16	7.9	05	M16-1.5	10	24	19
X0085-05-18	5/16	7.9	05	M18-1.5	12	25	22
X0085-06-18	3/8	9.5	06	M18-1.5	12	25	22
X0085-06-22	3/8	9.5	06	M22-1.5	15	29	27
X0085-08-22	1/2	12.7	08	M22-1.5	15	29	27
X0085-08-26	1/2	12.7	08	M26-1.5	18	29	32
X0085-10-26	5/8	15.9	10	M26-1.5	18	29	32
X0085-10-30	5/8	15.9	12	M30-2	22	29	36
X0085-12-30	3/4	19	12	M30-2	22	29	36
X0085-12-36	3/4	19	12	M36-2	28	28	41
X0085-16-36	1	25.4	16	M36-2	28	30	41
X0085-20-45	1.1/4	31.8	20	M45-2	35	40	50
X0085-24-52	1.1/2	38.1	24	M52-2	42	41	60

X0085

Metric Female 24°
- Seat Light Crimped Nut

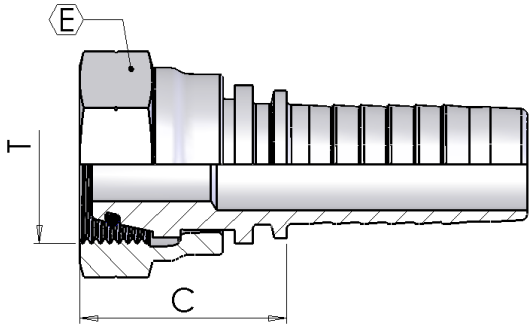

Part number	Hose I.D.		Dimensions				
			dash	Thread		Cut-Off	Hex
	in	mm	size	T	Erm	C	E
X0085-04-12	1/4	6.4	04	M12-1.5	6	25	14
X0085-05-14	5/16	7.9	05	M14-1.5	8	26	19
X0085-06-16	3/8	9.5	06	M16-1.5	10	25	19
X0085-08-18	1/2	12.7	08	M18-1.5	12	28	24
X0085-10-22	5/8	15.9	10	M22-1.5	15	32	27
X0085-12-26	3/4	19	12	M26-1.5	18	36	32

X0185

90° Metric Swept Elbow 24° - Seat Light

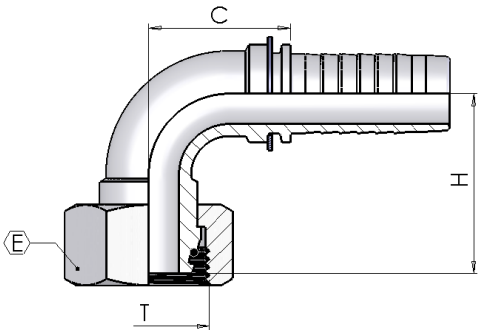

Part number	Hose I.D.		Dimensions					
			dash	Thread		Cut-Off	Hex	Drop
	in	mm	size	T	Erm	C	E	H
X0185-03-12	3/16	4.8	03	M12-1.5	6	22	14	23
X0185-04-14	1/4	6.4	04	M14-1.5	8	26	17	26
X0185-04-16	1/4	6.4	04	M16-1.5	10	25	19	27
X0185-04-18	1/4	6.4	04	M18-1.5	12	27	22	30
X0185-05-16	5/16	7.9	05	M16-1.5	10	31	19	31
X0185-05-18	5/16	7.9	05	M18-1.5	12	31	22	32
X0185-06-18	3/8	9.5	06	M18-1.5	12	32	22	35
X0185-06-22	3/8	9.5	06	M22-1.5	15	32	27	35
X0185-08-22	1/2	12.7	08	M22-1.5	15	41	27	38
X0185-08-26	1/2	12.7	08	M26-1.5	18	41	32	39
X0185-10-26	5/8	15.9	10	M26-1.5	18	44	32	44
X0185-12-30	3/4	19	12	M30-2	22	58	36	52
X0185-16-36	1	25.4	16	M36-2	28	72	41	62

X0185

90° Metric Swept Elbow 24° - Seat Light Crimped Nut

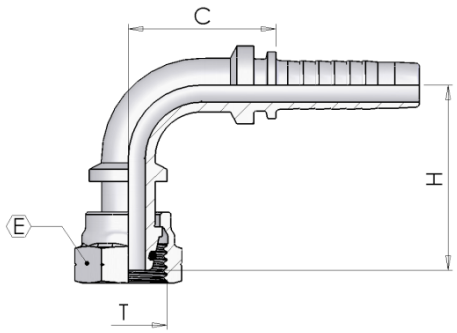

Part number	Hose I.D.		Dimensions					
			dash	Thread		Cut-Off	Hex	Drop
	in	mm	size	T	Erm	C	E	H
X0185-04-12	1/4	6.4	04	M12-1.5	6	26	14	34
X0185-05-14	5/16	7.9	05	M14-1.5	8	30	17	38
X0185-06-16	3/8	9.5	06	M16-1.5	10	32	19	39
X0185-10-22	5/8	15.9	08	M22-1.5	15	42	27	55

X0285

45° Metric Swept Elbow 24° - Seat Light

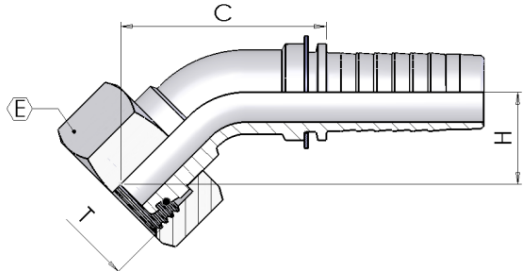

Part number	Hose I.D.		Dimensions					
			dash	Thread		Cut-Off	Hex	Drop
	in	mm	size	T	Erm	C	E	H
X0285-03-12	3/16	4.8	03	M12-1.5	6	36	14	14
X0285-04-14	1/4	6.4	04	M14-1.5	8	42	17	14
X0285-04-16	1/4	6.4	04	M16-1.5	10	42	19	15
X0285-04-18	1/4	6.4	04	M18-1.5	12	43	22	16
X0285-05-16	5/16	7.9	05	M16-1.5	10	48	19	17
X0285-05-18	5/16	7.9	05	M18-1.5	12	48	22	18
X0285-06-18	3/8	9.5	06	M18-1.5	12	52	22	19
X0285-06-22	3/8	9.5	06	M22-1.5	15	51	27	19
X0285-08-22	1/2	12.7	08	M22-1.5	15	63	27	21
X0285-10-26	5/8	15.9	10	M26-1.5	18	68	32	23
X0285-12-30	3/4	19	12	M30-2	22	85	36	27
X0285-16-36	1	25.4	16	M36-2	28	102	41	32

X0285

45° Metric Swept Elbow 24° - Seat Light Crimped Nut

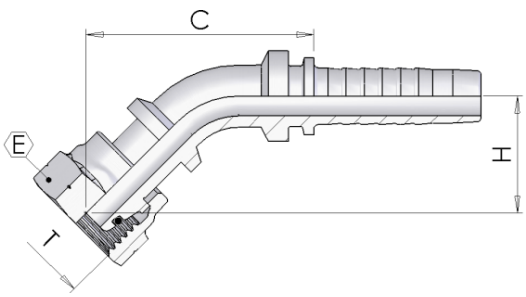

Part number	Hose I.D.		Dimensions					
			dash	Thread		Cut-Off	Hex	Drop
	in	mm	size	T	Erm	C	E	H
X0285-04-12	1/4	6.4	04	M12-1.5	6	46	14	20
X0285-06-16	3/8	9.5	06	M16-1.5	10	55	19	22

X0450

Metric Male 24° - Seat Heavy

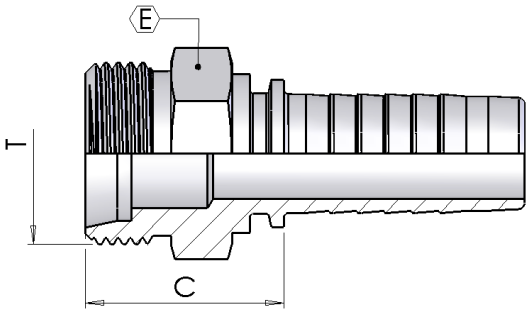

Part number	Hose I.D.		Dimensions				
			dash	Thread		Cut-Off	Hex
	in	mm	size	T	Erm	C	E
X0450-03-16	3/16	4.8	03	M16-1.5	8	26	17
X0450-04-14	1/4	6.4	04	M14-1.5	6	25	14
X0450-04-16	1/4	6.4	04	M16-1.5	8	27	17
X0450-04-18	1/4	6.4	04	M18-1.5	10	27	19
X0450-05-18	5/16	7.9	05	M18-1.5	10	27	19
X0450-05-20	5/16	7.9	05	M20-1.5	12	29	22
X0450-06-18	3/8	9.5	06	M18-1.5	10	27	19
X0450-06-20	3/8	9.5	06	M20-1.5	12	29	22
X0450-06-22	3/8	9.5	06	M22-1.5	14	31	22
X0450-06-24	3/8	9.5	06	M24-1.5	16	31	24
X0450-08-24	1/2	12.7	08	M24-1.5	16	32	24
X0450-10-30	5/8	15.9	10	M30-2	20	34	30
X0450-12-30	3/4	19	12	M30-2	20	35	30
X0450-12-36	3/4	19	12	M36-2	25	38	36
X0450-16-36	1	25.4	16	M36-2	25	39	36
X0450-16-42	1	25.4	16	M42-2	30	42	46
X0450-20-42	1.1/4	31.8	20	M42-2	30	43	46
X0450-20-52	1.1/4	31.8	20	M52-2	38	45	55
X0450-24-52	1.1/2	38.1	24	M52-2	38	45	55

X0084

Metric Female 24° - Seat Heavy

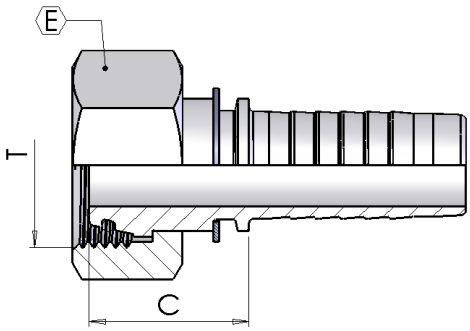

Part number	Hose I.D.		Dimensions				
			dash	Thread		Cut-Off	Hex
	in	mm	size	T	Erm	C	E
X0084-03-16	3/16	4.8	03	M16-1.5	8	25	19
X0084-04-14	1/4	6.4	04	M14-1.5	6	23	17
X0084-04-16	1/4	6.4	04	M16-1.5	8	25	19
X0084-04-18	1/4	6.4	04	M18-1.5	10	24	22
X0084-05-18	5/16	7.9	05	M18-1.5	10	24	22
X0084-05-20	5/16	7.9	05	M20-1.5	12	26	24
X0084-06-16	3/8	9.5	06	M16-1.5	8	26	19
X0084-06-18	3/8	9.5	06	M18-1.5	10	25	22
X0084-06-20	3/8	9.5	06	M20-1.5	12	25	24
X0084-06-22	3/8	9.5	06	M22-1.5	14	29	27
X0084-08-22	1/2	12.7	08	M22-1.5	14	17	27
X0084-08-24	1/2	12.7	08	M24-1.5	16	30	30
X0084-08-30	1/2	12.7	08	M30-2	20	33	36
X0084-10-24	5/8	15.9	10	M24-1.5	16	31	30
X0084-10-30	5/8	15.9	10	M30-2	20	33	36
X0084-12-30	3/4	19	12	M30-2	20	34	36
X0084-12-36	3/4	19	12	M36-2	25	40	46
X0084-16-36	1	25.4	16	M36-2	25	41	46
X0084-16-42	1	25.4	16	M42-2	30	43	50
X0084-20-52	1.1/4	31.8	20	M52-2	38	44	60
X0084-24-52	1.1/2	38.1	24	M52-2	38	44	60

X0184

90° Metric Swept Elbow 24° - Seat Heavy

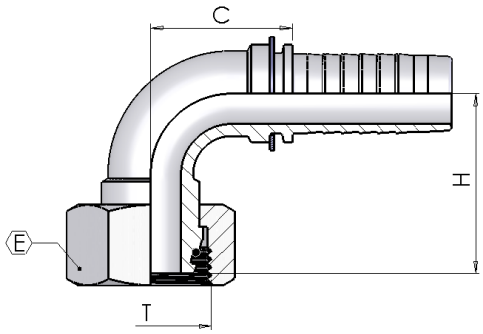

Part number	Hose I.D.		Dimensions					
			dash	Thread		Cut-Off	Hex	Drop
	in	mm	size	T	Erm	C	E	H
X0184-03-16	3/16	4.8	03	M16-1.5	8	22	19	25
X0184-04-14	1/4	6.4	04	M14-1.5	6	27	17	26
X0184-04-16	1/4	6.4	04	M16-1.5	8	26	19	26
X0184-04-18	1/4	6.4	04	M18-1.5	10	27	22	31
X0184-04-20	1/4	6.4	04	M20-1.5	12	27	24	30
X0184-05-18	5/16	7.9	05	M18-1.5	10	33	22	33
X0184-05-20	5/16	7.9	05	M20-1.5	12	30	24	34
X0184-06-18	3/8	9.5	06	M18-1.5	10	34	22	35
X0184-06-20	3/8	9.5	06	M20-1.5	12	34	24	34
X0184-06-22	3/8	9.5	06	M22-1.5	14	33	27	33
X0184-08-24	1/2	12.7	08	M24-1.5	16	40	30	41
X0184-10-30	5/8	15.9	10	M30-2	20	46	36	50
X0184-12-30	3/4	19	12	M30-2	20	58	36	56
X0184-12-36	3/4	19	12	M36-2	25	56	46	59
X0184-16-36	1	25.4	16	M36-2	25	69	46	67
X0184-16-42	1	25.4	16	M42-2	30	69	50	67
X0184-20-52	1.1/4	31.8	20	M52-2	38	84	60	82
X0184-24-52	1.1/2	38.1	24	M52-2	38	99	60	94

X0284

45° Metric Swept Elbow 24° - Seat Heavy

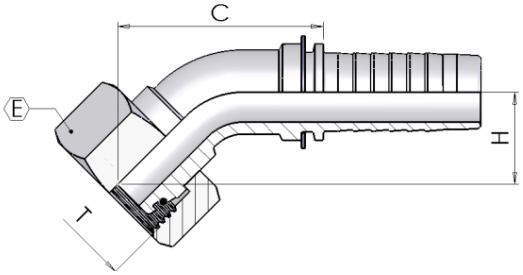

Part number	Hose I.D.		Dimensions					
			dash	Thread		Cut-Off	Hex	Drop
	in	mm	size	T	Erm	C	E	H
X0284-03-16	3/16	4.8	03	M16-1.5	8	36	19	16
X0284-04-14	1/4	6.4	04	M14-1.5	6	37	17	15
X0284-04-16	1/4	6.4	04	M16-1.5	8	42	19	15
X0284-04-18	1/4	6.4	04	M18-1.5	10	45	22	18
X0284-05-20	5/16	7.9	05	M20-1.5	12	49	24	19
X0284-06-18	3/8	9.5	06	M18-1.5	10	51	22	19
X0284-06-20	3/8	9.5	06	M20-1.5	12	53	24	18
X0284-06-22	3/8	9.5	06	M22-1.5	14	54	27	20
X0284-08-24	1/2	12.7	08	M24-1.5	16	63	30	21
X0284-10-30	5/8	15.9	10	M30-2	20	74	36	29
X0284-12-30	3/4	19	12	M30-2	20	87	36	30
X0284-12-36	3/4	19	12	M36-2	25	74	46	31
X0284-16-36	1	25.4	16	M36-2	25	105	46	34
X0284-16-42	1	25.4	16	M42-2	30	82	50	33
X0284-20-52	1.1/4	31.8	20	M52-2	38	105	60	39
X0284-24-52	1.1/2	38.1	24	M52-2	38	157	60	52

X1350

Metric Banjo

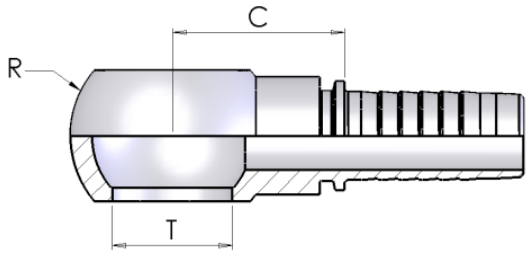

Part number	Hose I.D.		Dimensions			
			dash	Hole	Cut-Off	
	in	mm	size	mm	C	R
X1350-03-10	3/16	4.8	03	10.2	25	17
X1350-03-12	3/16	4.8	03	12.2	21	20
X1350-04-10	1/4	6.4	04	10.2	25	17
X1350-04-12	1/4	6.4	04	12.2	22	20
X1350-04-14	1/4	6.4	04	14.2	25	24
X1350-05-14	5/16	7.9	05	14.2	25	24
X1350-05-16	5/16	7.9	05	16.2	31	28
X1350-05-18	5/16	7.9	05	18.2	29	32
X1350-06-14	3/8	9.5	06	14.2	25	24
X1350-06-16	3/8	9.5	06	16.2	31	28
X1350-06-18	3/8	9.5	06	18.2	29	32
X1350-06-22	3/8	9.5	06	22.2	31	36
X1350-08-16	1/2	12.7	08	16.2	30	28
X1350-08-18	1/2	12.7	08	18.2	29	32
X1350-08-22	1/2	12.7	08	22.2	31	36
X1350-10-22	5/8	15.9	10	22.2	31	36
X1350-10-26	5/8	15.9	10	26.2	38	45
X1350-12-22	3/4	19	12	22.2	32	36
X1350-12-26	3/4	19	12	26.2	38	45
X1350-16-30	1	25.4	16	30.2	45	54

X1650

Metric perfored bolt

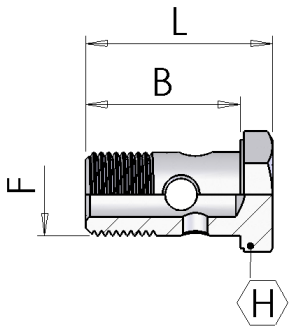

Part number	Dimensions			
				Drop
	B	F	L	H
X1650-00-12	26	M12 x 1.5	31	17
X1650-00-14	29	M14 x 1.5	34	19
X1650-00-16	33	M16 x 1.5	41	22
X1650-00-18	37	M18 x 1.5	44	24
X1650-00-22	38	M22 x 1.5	46	27
X1650-00-26	47	M26 x 1.5	56	32
X1650-00-30	58	M30 x 1.5	68	36

X0550

Metric Standpipe

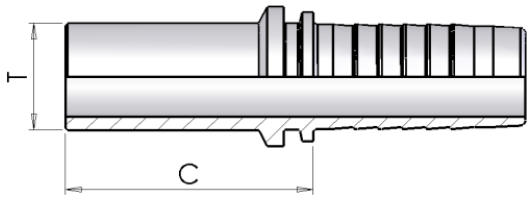

Part number	Hose I.D.		Dimensions			
			dash	pipe		Cut-Off
	in	mm	size	T	Type	C
X0550-03-06	3/16	4.8	03	6	L/S	30
X0550-03-08	3/16	4.8	03	8	L/S	29
X0550-04-06	1/4	6.4	04	6	L/S	32
X0550-04-08	1/4	6.4	04	8	L/S	30
X0550-04-10	1/4	6.4	04	10	L/S	33
X0550-04-12	1/4	6.4	04	12	L/S	30
X0550-05-08	5/16	7.9	05	08	L/S	31
X0550-05-10	5/16	7.9	05	10	L/S	31
X0550-05-12	5/16	7.9	05	12	L/S	33
X0550-06-08	3/8	9.5	06	08	L/S	33
X0550-06-10	3/8	9.5	06	10	L/S	33
X0550-06-12	3/8	9.5	06	12	L/S	32
X0550-06-14	3/8	9.5	06	14	S	37
X0550-06-15	3/8	9.5	06	15	L	32
X0550-08-12	1/2	12.7	08	12	L/S	36
X0550-08-14	1/2	12.7	08	14	S	39
X0550-08-15	1/2	12.7	08	15	L	34
X0550-08-16	1/2	12.7	08	16	S	39
X0550-08-18	1/2	12.7	08	18	L	35
X0550-08-20	1/2	12.7	08	20	S	45
X0550-10-18	5/8	15.9	10	18	L	35
X0550-10-20	5/8	15.9	10	20	S	45
X0550-10-22	5/8	15.9	10	22	L	33
X0550-12-18	3/4	19	12	18	L	37
X0550-12-20	3/4	19	12	20	S	46
X0550-12-22	3/4	19	12	22	L	38
X0550-12-25	3/4	19	12	25	S	49
X0550-12-28	3/4	19	12	28	L	40
X0550-16-25	1	25.4	16	25	S	51
X0550-16-28	1	25.4	16	28	L	41
X0550-16-30	1	25.4	16	30	S	54
X0550-16-38	1	25.4	16	38	S	60
X0550-20-30	1.1/4	31.8	20	30	S	58
X0550-20-35	1.1/4	31.8	20	35	L	48
X0550-20-38	1.1/4	31.8	20	38	S	62
X0550-24-38	1.1/2	38.1	24	38	S	63
X0550-24-42	1.1/2	38.1	24	42	L	50

X0650

90° Metric Standpipe

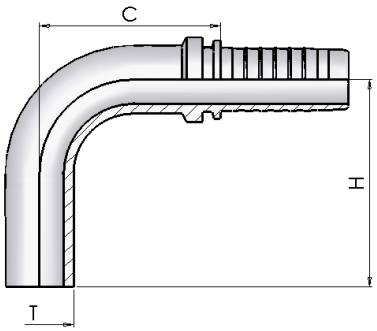

Part number	Hose I.D.		Dimensions				
			dash	pipe		Cut-Off	Drop
	in	mm	size	T	Type	C	H
X0650-03-06	3/16	4.8	03	6	L/S	20	32
X0650-04-06	1/4	6.4	04	6	L/S	23	32
X0650-04-08	1/4	6.4	04	8	L/S	25	34
X0650-04-10	1/4	6.4	04	10	L/S	25	43
X0650-05-10	5/16	7.9	05	10	L/S	29	40
X0650-05-12	5/16	7.9	05	12	L/S	29	45
X0650-06-10	3/8	9.5	06	10	L/S	27	40
X0650-06-12	3/8	9.5	06	12	L/S	30	44
X0650-08-14	1/2	12.7	08	14	S	36	46
X0650-08-15	1/2	12.7	08	15	L	39	52
X0650-08-16	1/2	12.7	08	16	S	42	56
X0650-08-18	1/2	12.7	08	18	L	42	56
X0650-10-18	5/8	15.9	10	18	L	42	56
X0650-10-20	5/8	15.9	10	20	S	48	65
X0650-12-20	3/4	19	12	20	S	48	65
X0650-12-22	3/4	19	12	22	L	51	71
X0650-12-25	3/4	19	12	25	S	57	75
X0650-16-25	1	25.4	16	25	S	57	75
X0650-16-28	1	25.4	16	28	L	60	89
X0650-16-30	1	25.4	16	30	S	65	89
X0650-20-30	1.1/4	31.8	20	30	S	66	89
X0650-20-38	1.1/4	31.8	20	38	S	83	102
X0650-24-38	1.1/2	38.1	24	38	S	82	102

X0750

45° Metric Standpipe

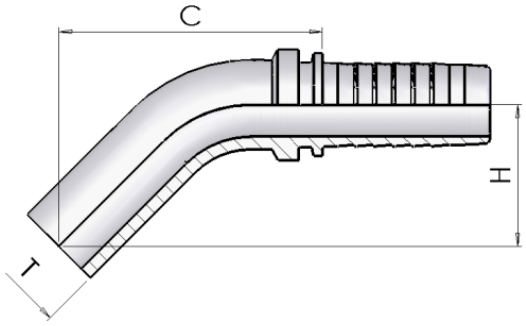

Part number	Hose I.D.		Dimensions				
			dash	pipe		Cut-Off	Drop
	in	mm	size	T	Type	C	H
X0750-03-06	3/16	4.8	03	6	L/S	38	25
X0750-04-06	1/4	6.4	04	6	L/S	41	24
X0750-04-08	1/4	6.4	04	8	L/S	43	25
X0750-04-10	1/4	6.4	04	10	L/S	47	30
X0750-05-10	5/16	7.9	05	10	L/S	49	30
X0750-05-12	5/16	7.9	05	12	L/S	53	32
X0750-06-10	3/8	9.5	06	10	L/S	50	33
X0750-06-12	3/8	9.5	06	12	L/S	52	33
X0750-08-14	1/2	12.7	08	14	S	50	27
X0750-08-15	1/2	12.7	08	15	L	55	29
X0750-08-16	1/2	12.7	08	16	S	54	27
X0750-08-18	1/2	12.7	08	18	L	56	29
X0750-10-18	5/8	15.9	10	18	L	56	29
X0750-10-20	5/8	15.9	10	20	S	56	34
X0750-12-20	3/4	19	12	20	S	63	34
X0750-12-22	3/4	19	12	22	L	65	35
X0750-12-25	3/4	19	12	25	S	76	41
X0750-16-25	1	25.4	16	25	S	76	41
X0750-16-28	1	25.4	16	28	L	84	49
X0750-16-30	1	25.4	16	30	S	86	44
X0750-20-30	1.1/4	31.8	20	30	S	88	44
X0750-20-38	1.1/4	31.8	20	38	S	101	50
X0750-24-38	1.1/2	38.1	24	38	S	100	50

XFK50

K' Female

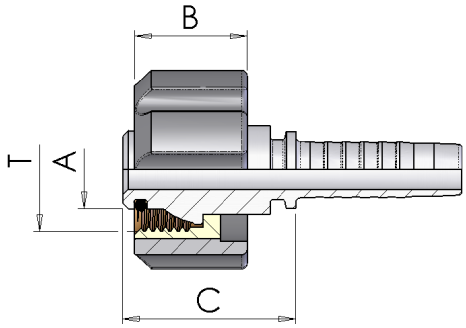

Part number	Hose I.D.		Dimensions				
			dash	Thread	Cut-Off		
	in	mm	size	T	C	A	B
XFK50-04-22	1/4	6.4	04	M22-1.5	31	14	20
XFK50-05-22	5/16	7.9	05	M22-1.5	31	14	20
XFK50-06-22	3/8	9.5	06	M22-1.5	31	14	20
XFK50-04022	1/4	6.4	04	M22-1.5	31	14	27
XFK50-05022	5/16	7.9	05	M22-1.5	31	14	27
XFK50-06022	3/8	9.5	06	M22-1.5	31	14	27

XS350

ORFS Male

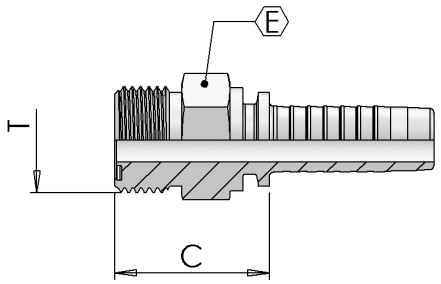

Part number	Hose I.D.		Dimensions			
			dash	Thread	Cut-Off	Hex
	in	mm	size	T	C	E
XS350-04-06	1/4	6.4	04	9/16-18	23	17
XS350-04-09	1/4	6.4	04	11/16-16	21	19
XS350-05-09	5/16	7.9	05	11/16-16	26	19
XS350-06-09	3/8	9.5	06	11/16-16	26	19
XS350-06-11	3/8	9.5	6	13/16-16	29	22
XS350-08-11	1/2	12.7	08	13/16-16	29	22
XS350-08-13	1/2	12.7	08	1-14	34	27
XS350-08-14	1/2	12.7	08	1.3/16-12	35	32
XS350-10-13	5/8	15.9	10	1-14	33	27
XS350-10-14	5/8	15.9	10	1.3/16-12	35	32
XS350-12-14	3/4	19	12	1.3/16-12	36	32
XS350-12-15	3/4	19	12	1.7/16-12	36	38
XS350-16-15	1	25.4	16	1.7/16-12	37	38
XS350-16-21	1	25.4	16	1.11/16-12	38	46
XS350-20-21	1.1/4	31.8	20	1.11/16-12	39	46

XS050

ORFS Female

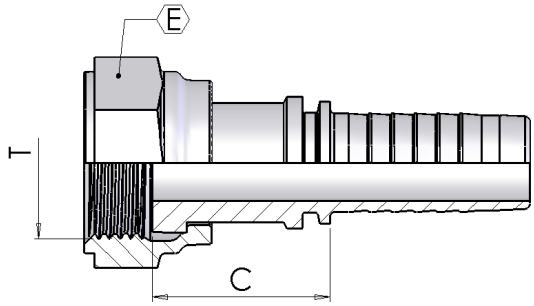

Part number	Hose I.D.		Dimensions			
			dash	Thread	Cut-Off	Hex
	in	mm	size	T	C	E
XS050-04-06	1/4	6.4	04	9/16-18	25	19
XS050-04-09	1/4	6.4	04	11/16-16	29	22
XS050-05-09	5/16	7.9	05	11/16-16	29	22
XS050-06-09	3/8	9.5	06	11/16-16	29	22
XS050-06-11	3/8	9.5	06	13/16-16	30	24
XS050-08-11	1/2	12.7	08	13/16-16	32	24
XS050-08-13	1/2	12.7	08	1-14	35	30
XS050-08-14	1/2	12.7	08	1.3/16-12	37	36
XS050-10-13	5/8	15.9	10	1-14	35	30
XS050-10-14	5/8	15.9	10	1.3/16-12	34	36
XS050-12-13	3/4	19	12	1-14	37	30
XS050-12-14	3/4	19	12	1.3/16-12	35	36
XS050-12-15	3/4	19	12	1.7/16-12	41	41
XS050-16-15	1	25.4	16	1.7/16-12	39	41
XS050-20-21	1.1/4	31.8	20	1.11/16-12	40	50
XS050-24-32	1.1/2	38.1	24	2-12	41	60

XS150

ORFS 90° Swept Elbow

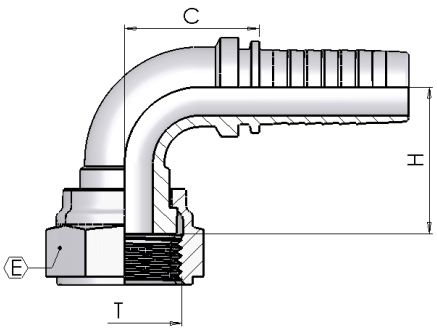

Part number	Hose I.D.		Dimensions				
			dash	Thread	Cut-Off	Hex	Drop
	in	mm	size	T	C	E	H
XS150-04-06	1/4	6.4	04	9/16-18	25	19	26
XS150-04-09	1/4	6.4	04	11/16-16	25	22	23
XS150-05-09	5/16	7.9	05	11/16-16	29	22	32
XS150-06-09	3/8	9.5	06	11/16-16	33	22	33
XS150-06-11	3/8	9.5	06	13/16-16	33	24	32
XS150-08-11	1/2	12.7	08	13/16-16	39	24	36
XS150-08-13	1/2	12.7	08	1-14	39	30	40
XS150-08-14	1/2	12.7	08	1.3/16-12	42	36	39
XS150-10-13	5/8	15.9	10	1-14	47	30	39
XS150-12-14	3/4	19	12	1.3/16-12	57	36	49
XS150-12-15	3/4	19	12	1.7/16-12	56	41	51
XS150-16-15	1	25.4	16	1.7/16-12	67	41	62
XS150-20-21	1.1/4	31.8	20	1.11/16-12	86	50	72
XS150-24-32	1.1/2	38.1	24	2-12	103	60	82

XS250

ORFS 45° Swept Elbow

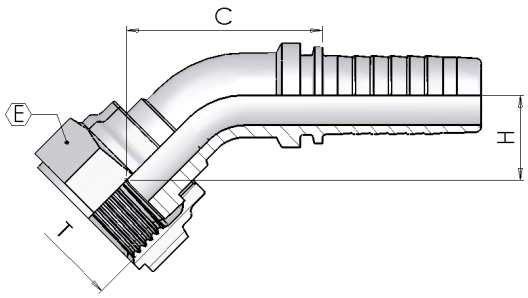

Part number	Hose I.D.		Dimensions				
			dash	Thread	Cut-Off	Hex	Drop
	in	mm	size	T	C	E	H
XS250-04-06	1/4	6.4	04	9/16-18	40	19	14
XS250-04-09	1/4	6.4	04	11/16-16	38	22	14
XS250-05-09	5/16	7.9	05	11/16-16	44	22	14
XS250-06-09	3/8	9.5	06	11/16-16	52	22	17
XS250-06-11	3/8	9.5	06	13/16-16	51	24	18
XS250-08-11	1/2	12.7	08	13/16-16	62	24	20
XS250-08-13	1/2	12.7	08	1-14	64	30	23
XS250-08-14	1/2	12.7	08	1.3/16-12	62	36	23
XS250-10-13	5/8	15.9	10	1-14	67	30	22
XS250-12-14	3/4	19	12	1.3/16-12	84	36	23
XS250-12-15	3/4	19	12	1.7/16-12	84	41	26
XS250-16-15	1	25.4	16	1.7/16-12	100	41	31
XS250-20-21	1.1/4	31.8	20	1.11/16-12	111	50	44
XS250-24-32	1.1/2	38.1	24	2-12	123	60	53

X1260

Straight SAE Flange 3000 PSI

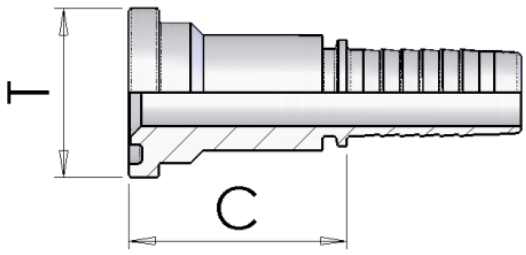

Part number	Hose I.D.		Dimensions			
			dash	Flange		Cut-Off
	in	mm	size	T	mm	C
X1260-08-08	1/2	12.7	08	1/2	30,2	45
X1260-08-12	1/2	12.7	08	3/4	38.1	50
X1260-10-08	5/8	15.9	10	1/2	30,2	45
X1260-10-12	5/8	15.9	10	3/4	38.1	49
X1260-12-12	3/4	19	12	3/4	38.1	50
X1260-12-16	3/4	19	12	1	44.5	53
X1260-16-16	1	25.4	16	1	44.5	54
X1260-16-20	1	25.4	16	1.1/4	50.8	57
X1260-20-20	1.1/4	31.8	20	1.1/4	50.8	59
X1260-20-24	1.1/4	31.8	20	1.1/2	60.3	62
X1260-24-24	1.1/2	38.1	24	1.1/2	60.3	62
X1260-24-32	1.1/2	38.1	24	2	71.4	67
X1260-32-32	2	50.8	32	2	71.4	68
X1260-32-40	2	50.8	32	2.1/2	84.1	76

X1060

90° SAE Flange 3000 PSI

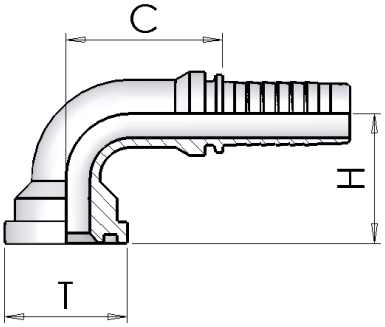

Part number	Hose I.D.		Dimensions				
			dash	Flange		Cut-Off	Drop
	in	mm	size	T	mm	C	H
X1060-08-08	1/2	12.7	08	1/2	30,2	39	39
X1060-08-12	1/2	12.7	08	3/4	38.1	39	44
X1060-10-08	5/8	15.9	10	1/2	30,2	45	42
X1060-10-12	5/8	15.9	10	3/4	38.1	45	47
X1060-12-12	3/4	19	12	3/4	38.1	56	53
X1060-12-16	3/4	19	12	1	44.5	56	58
X1060-16-16	1	25.4	16	1	44.5	70	65
X1060-16-20	1	25.4	16	1.1/4	50.8	70	70
X1060-16-24	1	25.4	16	1.1/2	60.3	72	71
X1060-20-16	1.1/4	31.8	20	1	44.5	81	77
X1060-20-20	1.1/4	31.8	20	1.1/4	50.8	86	77
X1060-20-24	1.1/4	31.8	20	1.1/2	60.3	85	81
X1060-24-24	1.1/2	38.1	24	1.1/2	60.3	98	89
X1060-24-32	1.1/2	38.1	24	2	71.4	93	97
X1060-32-32	2	50.8	32	2	71.4	123	121

X1160

45° SAE Flange 3000 PSI

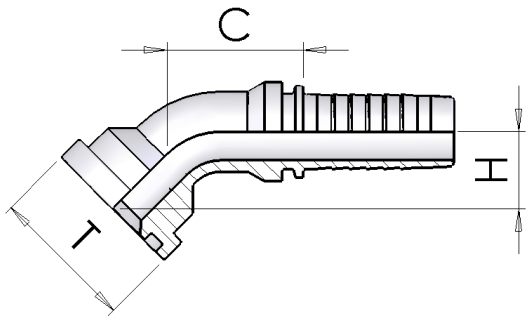

Part number	Hose I.D.		Dimensions				
			dash	Flange		Cut-Off	Drop
	in	mm	size	T	mm	C	H
X1160-08-08	1/2	12.7	08	1/2	30,2	62	22
X1160-08-12	1/2	12.7	08	3/4	38.1	67	25
X1160-12-12	3/4	19	12	3/4	38.1	69	27
X1160-12-16	3/4	19	12	1	44.5	88	30
X1160-16-16	1	25.4	16	1	44.5	82	33
X1160-16-20	1	25.4	16	1.1/4	50.8	108	37
X1160-20-20	1.1/4	31.8	20	1.1/4	50.8	102	38
X1160-20-24	1.1/4	31.8	20	1.1/2	60.3	129	39
X1160-24-24	1.1/2	38.1	24	1.1/2	60.3	114	44
X1160-24-32	1.1/2	38.1	24	2	71.4	148	47
X1160-32-32	2	50.8	32	2	71.4	130	58

XS003

Cut Split Flanges - 3000 psi

Semiflange tagliate - 3000 psi

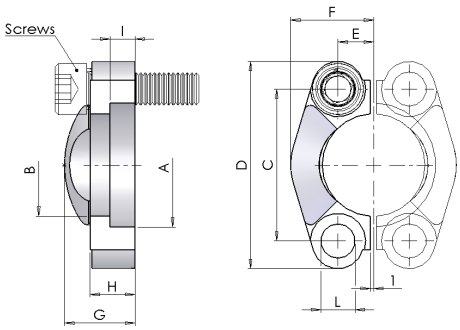

Part number	Dimensions										
										Drop	Sae
	A	B	C	D	E	F	G	I	L	H	SIZE
XS003-08	30.96	24.3	38.1	54	8.7	22.8	19	6.2	8.8	13	1/2”
XS003-12	38.89	32.1	47.6	65	11.1	25.9	22	6.2	10.8	14	3/4”
XS003-16	45.24	38.5	52.4	70	13.1	29.2	24	7.5	10.8	16	1”
XS003-20	51.59	43.7	58.7	79	15.1	36.3	22	7.5	12	14	1”1/4
XS003-24	61.09	50.8	69.9	94	17.9	41.1	25	7.5	13.5	16	1”1/2
XS003-32	72.24	62.7	77.8	102	21.4	48.2	26	9	13.5	16	2”

X1310

Straight SAE Flange 6000 PSI

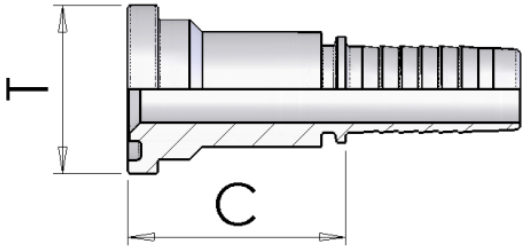

Part number	Hose I.D.		Dimensions			
			dash	Flange		Cut-Off
	in	mm	size	T	mm	C
X1310-08-08	1/2	12.7	08	1/2	31,8	46
X1310-08-12	1/2	12.7	08	3/4	41.3	53
X1310-10-08	5/8	15.9	10	1/2	31,8	46
X1310-10-12	5/8	15.9	10	3/4	41.3	53
X1310-10-16	5/8	15.9	10	1	47.6	59
X1310-12-12	3/4	19	12	3/4	41.3	54
X1310-12-16	3/4	19	12	1	47.6	60
X1310-16-12	1	25.4	16	3/4	41.3	55
X1310-16-16	1	25.4	16	1	47.6	61
X1310-16-20	1	25.4	16	1.1/4	54	68
X1310-20-20	1.1/4	31.8	20	1.1/4	54	70
X1310-20-24	1.1/4	31.8	20	1.1/2	63.5	76
X1310-24-24	1.1/2	38.1	24	1.1/2	63.5	76
X1310-24-32	1.1/2	38.1	24	2	79.4	85
X1310-32-32	2	50.8	32	2	79.4	85

X1110

90° SAE Flange 6000 PSI

Flangia 90° SAE 6000 PSI

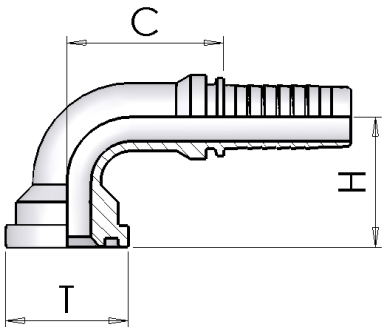

Part number	Hose I.D.		Dimensions				
			dash	Flange		Cut-Off	Drop
	in	mm	size	T	mm	C	H
X1110-08-08	1/2	12.7	08	1/2	31.8	39	39
X1110-08-12	1/2	12.7	08	3/4	41.3	39	48
X1110-10-08	5/8	15.9	10	1/2	31.8	45	42
X1110-10-12	5/8	15.9	10	3/4	41.3	44	52
X1110-10-16	5/8	15.9	10	1	47.6	45	56
X1110-12-08	3/4	19	12	1/2	32	56	54
X1110-12-12	3/4	19	12	3/4	41.3	56	55
X1110-12-16	3/4	19	12	1	47.6	56	63
X1110-16-12	1	25.4	16	3/4	41.3	68	64
X1110-16-16	1	25.4	16	1	47.6	70	69
X1110-16-20	1	25.4	16	1.1/4	54	71	74
X1110-20-20	1.1/4	31.8	20	1.1/4	54	97	83
X1110-20-24	1.1/4	31.8	20	1.1/2	63.5	97	90
X1110-24-24	1.1/2	38.1	24	1.1/2	63.5	102	99
X1110-24-32	1.1/2	38.1	24	2	79.4	103	108
X1110-32-32	2	50.8	32	2	79.4	125	136

X1210

45° SAE Flange 6000 PSI

Flangia 45° SAE 6000 PSI

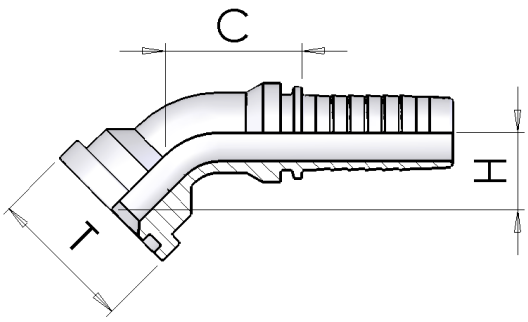

Part number	Hose I.D.		Dimensions				
			dash	Flange		Cut-Off	Drop
	in	mm	size	T	mm	C	H
X1210-08-08	1/2	12.7	08	1/2	31.8	62	22
X1210-08-12	1/2	12.7	08	3/4	41.3	69	28
X1210-10-08	5/8	15.9	10	1/2	31.8	66	21
X1210-10-12	5/8	15.9	10	3/4	41.3	75	27
X1210-10-16	5/8	15.9	10	1	47.6	77	32
X1210-12-12	3/4	19	12	3/4	41.3	74	28
X1210-12-16	3/4	19	12	1	47.6	90	32
X1210-16-12	1	25.4	16	3/4	41.3	101	30
X1210-16-16	1	25.4	16	1	47.6	86	34
X1210-16-20	1	25.4	16	1.1/4	54	112	41
X1210-20-20	1.1/4	31.8	20	1.1/4	54	107	43
X1210-20-24	1.1/4	31.8	20	1.1/2	63.5	149	48
X1210-24-24	1.1/2	38.1	24	1.1/2	63.5	122	50
X1210-24-32	1.1/2	38.1	24	2	79.4	163	66
X1210-32-32	2	50.8	32	2	79.4	145	68

XS006

Cut Split Flanges - 6000 psi
Semiflange tagliate - 6000 psi

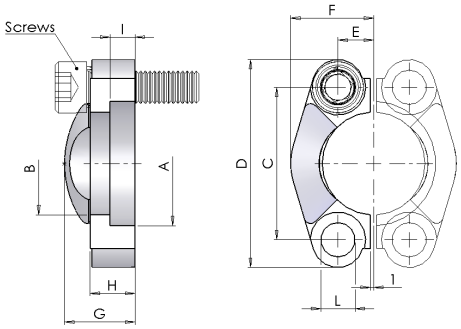

Part number	Dimensions										
											Sae
	A	B	C	D	E	F	G	I	L	H	SIZE
XS006-08	32.54	24.6	40.5	56	9.1	23.6	22	7.2	8.8	16	1/2″
XS006-12	42.06	32.5	50.8	71	11.9	30	28	8.3	11	19	3/4″
XS006-16	48.41	38.9	57.2	81	13.9	34.8	33	9	13	24	1″
XS006-20	54.76	44.5	66.7	95	15.9	38.6	38	9.8	15	27	1″1/4
XS006-24	64.29	51.6	79.4	113	18.3	47.5	43	12.1	17	30	1″1/2
XS006-32	80.16	67.6	96.8	133	22.2	56.9	52	12.1	21	37	2″

XD050

Hose Junction
Giunzione per Tubi Flessibili

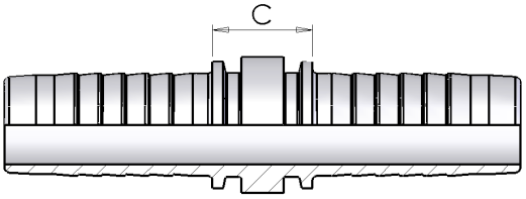

Part number	Hose I.D.		Dimensions	
			dash	Cut-Off
	in	mm	size	C
XD050-03	3/16	4.8	03	17
XD050-04	1/4	6.4	04	17
XD050-05	5/16	7.9	05	17
XD050-06	3/8	9.5	06	17
XD050-08	1/2	12.7	08	18
XD050-10	5/8	15.9	10	18
XD050-12	3/4	19	12	19
XD050-16	1	25.4	16	21
XD050-20	1.1/4	31.8	20	24
XD050-24	1.1/2	38.1	24	24
XD050-32	2	50.8	32	26

INTER-LOCK TAILS

Index

Ferrule Boccola

X004N

Swaged Ferrule (skive)
66

X0013

Swaged Ferrule (skive)
66

NPTF Male

X0370H

NPTF Male 60° cone
67

BSP 60°

X0350H

BSP Male Parallel 60° cone
67

X0050H

BSP Female 60° cone Thrust Wire
68

X0150H

BSP 90° Swept Elbow 60° cone Thrust Wire
68

X0250H

BSP 45° Swept Elbow 60° cone Thrust Wire
69

JIC male

X0850H

JIC Male 74° cone
69

JIC 37°

X0900H

JIC Female 74° cone Thrust Wire
70

X0950H

JIC 90° Swept Elbow 74° cone Thrust Wire
70

X1000H

JIC 45° Swept Elbow 74° cone Thrust Wire
71

CES/DKOS

X0450H

Metric Male 24° Seat Heavy
71

X0084H
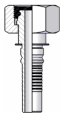
Metric Female 24° Seat Heavy
72

DKOS DKOS

X0184H

90° Metric Swept Elbow 24° Seat Heavy
72

X0284H

45° Metric Swept Elbow 24° Seat Heavy
73

ORFS

XS050H

ORFS Female
73

XS05TH

ORFS Female Back Hexagon
74

Dimensions and general characteristics may be changed at any time, data contained here in are only for information purpose only and it does not enlarge, amend or imply any warranty other than provided by us with the product. Any use of the product not in conformance with our instructions may be dangerous.

XS150H

ORFS 90° Swept Elbow

74

XS250H

ORFS 45° Swept Elbow

75

XS350H

ORFS Male

75

SAE flange

X1250H

Straight SAE Flange 3000 PSI

76

X1050H

90° SAE Flange 3000 PSI

76

X1150H

45° SAE Flange 3000 PSI

77

X1300H

Straight SAE Flange 6000 PSI

78

X1100H

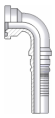

90° SAE Flange 6000 PSI

79

X1200H

45° SAE Flange 6000 PSI

80

Dimensions and general characteristics may be changed at any time, data contained here in are only for information purpose only and it does not enlarge, amend or imply any warranty other than provided by us with the product. Any use of the product not in conformance with our instructions may be dangerous.

X004N

Swaged Ferrule (skive)

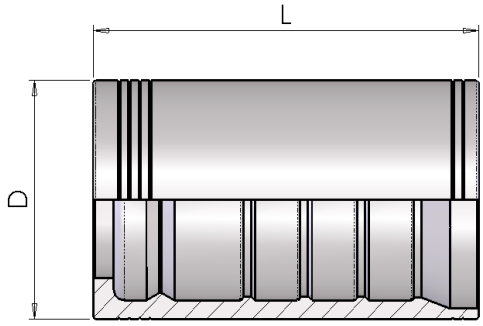

Part number	Hose I.D.		Dimensions		Skive Length
	in	mm	D	L	
X004N-12	3/4	19.0	38	60	52/15
X004N-16	1	25.4	46	74.5	64/17
X004N-20	1.1/4	31.8	55	88	74/22
X004N-24	1.1/2	38.1	62	94	81/22,5
X004N-32	2	50.8	78	99	85/30

X0013

Swaged Ferrule (skive)

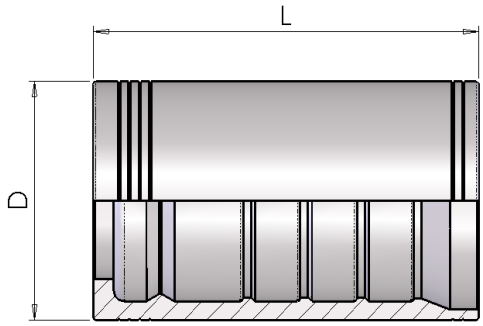

Part number	Hose I.D.		Dimensions		Skive Length
	in	mm	D	L	
X0013-10	5/8	35.5	19.5	57.5	47/15
X0013-16	1	48	25.4	75	64/17
X0013-20	1.1/4	31.8	60	88	74/22
X0013-24	1.1/2	38.1	67	94	81/22,5
X0013-32	2	50.8	84.5	99	85/30

X0370H

NPTF Male 60° Cone

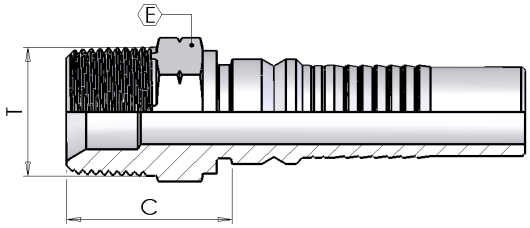

Part number	Hose I.D.		Dimensions			
			dash	Thread	Cut-Off	Hex
	in	mm	size	T	C	E
X0370H12-12	3/4	19.0	12	3/4-14	35	27
X0370H16-16	1	25.4	16	1-11.1/2	41	36
X0370H20-20	1.1/4	31.8	20	1.1/4-11.1/2	44	46
X0370H24-24	1.1/2	38.1	24	1.1/2-11.1/2	47	50
X0370H32-32	2	50.8	32	2-11.1/2	54	65

X0350H

BSP Male Parallel 60° Cone

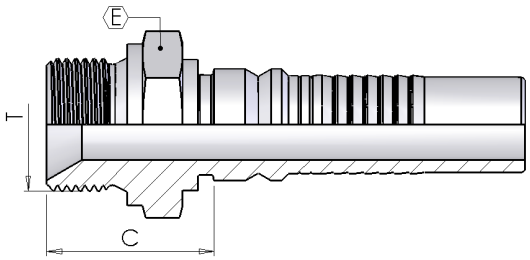

Part number	Hose I.D.		Dimensions			
			dash	Thread	Cut-Off	Hex
	in	mm	size	T	C	E
X0350H12-12	3/4	19.0	12	3/4-14	33	32
X0350H12-16	3/4	19.0	12	1-11	36	41
X0350H16-16	1	25.4	16	1-11	37	41
X0350H16-20	1	25.4	16	1.1/4-11	41	50
X0350H20-20	1.1/4	31.8	20	1.1/4-11	42	50
X0350H24-24	1.1/2	38.1	24	1.1/2-11	44	55
X0350H32-32	2	50.8	32	2-11	53	70

X0050H

BSP Female 60° Cone - Thrust Wire

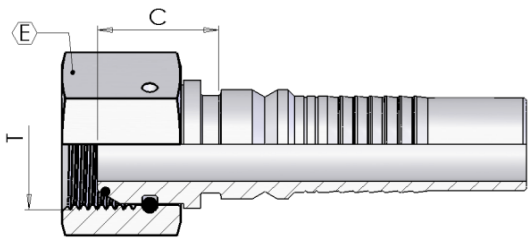

Part number	Hose I.D.		Dimensions			
			dash	Thread	Cut-Off	Hex
	in	mm	size	T	C	E
X0050H12-12	3/4	19.0	12	3/4-14	23	32
X0050H12-16	3/4	19.0	12	1-11	25	38
X0050H16-16	1	25.4	16	1-11	26	38
X0050H20-20	1.1/4	31.8	20	1.1/4-11	29	50
X0050H20-24	1.1/4	31.8	20	1.1/2-11	31	55
X0050H24-24	1.1/2	38.1	24	1.1/2-11	31	55
X0050H32-32	2	50.8	32	2-11	30	70

X0150H

BSP 90° Swept Elbow 60° Cone - Thrust Wire

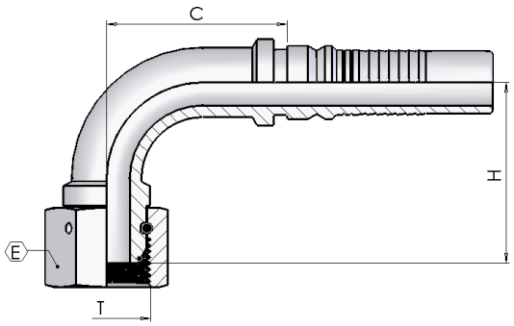

Part number	Hose I.D.		Dimensions				
			dash	Thread	Cut-Off	Hex	Drop
	in	mm	size	T	C	E	H
X0150H12-12	3/4	19.0	12	3/4-14	54	32	57
X0150H16-16	1	25.4	16	1-11	73	38	70
X0150H16-20	1	25.4	16	1.1/4-11	73	50	76
X0150H20-20	1.1/4	31.8	20	1.1/4-11	93	50	83
X0150H24-24	1.1/2	38.1	24	1.1/2-11	111	55	104
X0150H32-32	2	50.8	32	2-11	122	70	135

X0250H

BSP 45° Swept Elbow 60° Cone - Thrust Wire

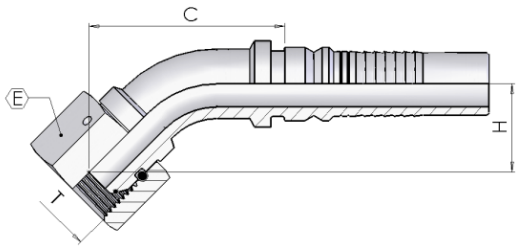

Part number	Hose I.D.		Dimensions				
			dash	Thread	Cut-Off	Hex	Drop
	in	mm	size	T	C	E	H
X0250H12-12	3/4	19.0	12	3/4-14	84	32	28
X0250H16-16	1	25.4	16	1-11	112	38	38
X0250H20-20	1.1/4	31.8	20	1.1/4-11	137	50	41
X0250H24-24	1.1/2	38.1	24	1.1/2-11	166	55	54
X0250H32-32	2	50.8	32	2-11	195	70	70

X0850H

JIC Male 74° Cone

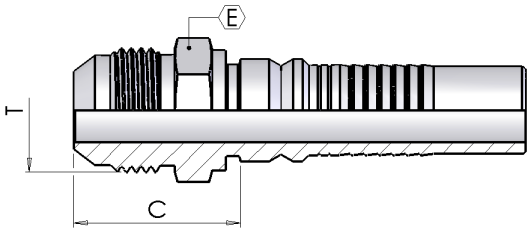

Part number	Hose I.D.		Dimensions			
			dash	Thread	Cut-Off	Hex
	in	mm	size	T	C	E
X0850H12-12	3/4	19.0	12	1.1/16-12	36	27
X0850H16-16	1	25.4	16	1.5/16-12	40	34
X0850H20-20	1.1/4	31.8	20	1.5/8-12	44	42
X0850H24-24	1.1/2	38.1	24	1.7/8-12	49	50
X0850H32-32	2	50.8	32	2.1/2-12	61	65

X0900H

JIC Female 74° Cone - Thrust Wire

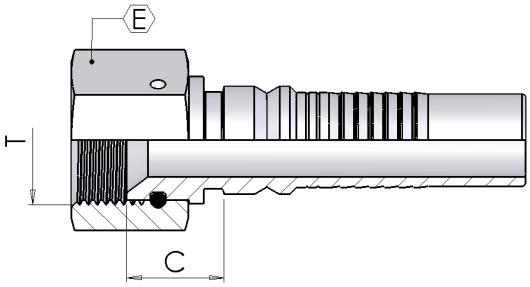

Part number	Hose I.D.		Dimensions			
			dash	Thread	Cut-Off	Hex
	in	mm	size	T	C	E
X0900H12-12	3/4	19.0	12	1.1/16-12	19	32
X0900H12-16	3/4	19.0	12	1.5/16-12	22	41
X0900H16-16	1	25.4	16	1.5/16-12	23	41
X0900H20-20	1.1/4	31.8	20	1.5/8-12	26	50
X0900H24-24	1.1/2	38.1	24	1.7/8-12	29	55
X0900H32-32	2	50.8	32	2.1/2-12	30	70

X0950H

JIC 90° Swept Elbow 74° Cone - Thrust Wire

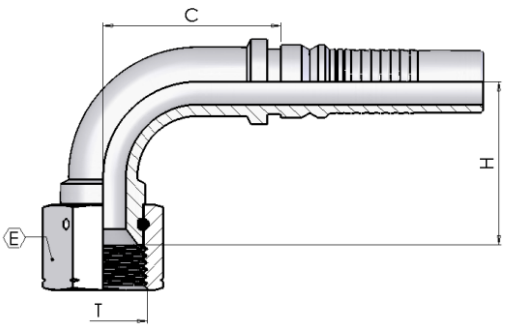

Part number	Hose I.D.		Dimensions				
			dash	Thread	Cut-Off	Hex	Drop
	in	mm	size	T	C	E	H
X0950H12-12	3/4	19.0	12	1.1/16-12	54	32	54
X0950H12-16	3/4	19.0	12	1.5/16-12	54	41	62
X0950H16-16	1	25.4	16	1.5/16-12	77	41	66
X0950H20-20	1.1/4	31.8	20	1.5/8-12	92	50	86
X0950H24-24	1.1/2	38.1	24	1.7/8-12	112	55	100
X0950H32-32	2	50.8	32	2.1/2-12	121	70	134

X1000H

JIC 45° Swept Elbow 74° Cone - Thrust Wire

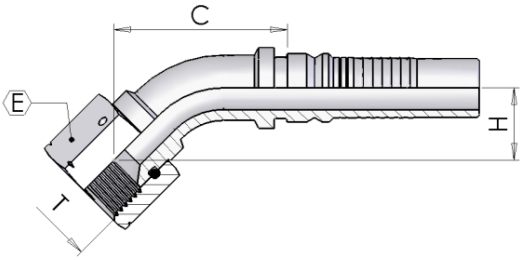

Part number	Hose I.D.		Dimensions				
			dash	Thread	Cut-Off	Hex	Drop
	in	mm	size	T	C	E	H
X1000H12-12	3/4	19.0	12	1.1/16-12	85	32	28
X1000H12-16	3/4	19.0	12	1.5/16-12	88	41	32
X1000H16-16	1	25.4	16	1.5/16-12	113	41	36
X1000H20-20	1.1/4	31.8	20	1.5/8-12	133	50	50
X1000H24-24	1.1/2	38.1	24	1.7/8-12	165	55	49
X1000H32-32	2	50.8	32	2.1/2-12	194	70	67

X0450H

Metric Male 24° - Seat Heavy

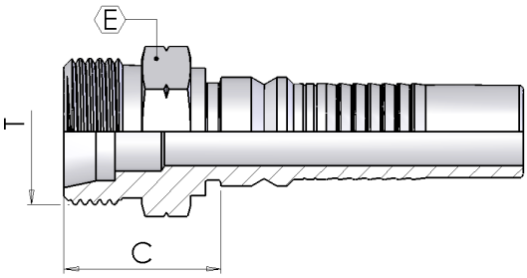

Part number	Hose I.D.		Dimensions				
			dash	Thread		Cut-Off	Hex
	in	mm	size	T	Erm	C	E
X0450H12-36	3/4	19.0	12	M36-2	25	36	36
X0450H16-42	1	25.4	16	M42-2	30	39	46
X0450H20-52	1.1/4	31.8	20	M52-2	38	42	55
X0450H24-52	1.1/2	38.1	24	M52-2	38	43	55

X0084H

Metric Female 24° - Seat Heavy

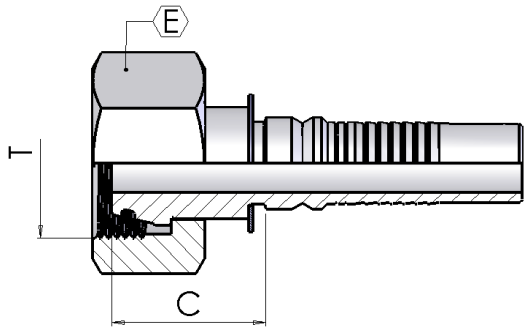

Part number	Hose I.D.		Dimensions				
			dash	Thread		Cut-Off	Hex
	in	mm	size	T	Erm	C	E
X0084H12-36	3/4	19.0	12	M36-2	25	37	46
X0084H16-36	1	25.4	16	M36-2	25	38	46
X0084H16-42	1	25.4	16	M42-2	30	41	50
X0084H20-52	1.1/4	31.8	20	M52-2	38	41	60
X0084H24-52	1.1/2	38.1	24	M52-2	38	42	60

X0184H

90° Metric Swept Elbow 24° - Seat Heavy

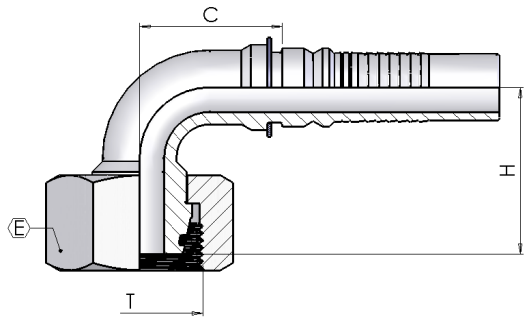

Part number	Hose I.D.		Dimensions					
			dash	Thread		Cut-Off	Hex	Drop
	in	mm	size	T	Erm	C	E	H
X0184H12-36	3/4	19.0	12	M36-2	25	55	46	58
X0184H16-36	1	25.4	16	M36-2	25	75	46	68
X0184H16-42	1	25.4	16	M42-2	30	74	50	69
X0184H20-52	1.1/4	31.8	20	M52-2	38	94	60	81

X0284H

45° Metric Swept Elbow 24° - Seat Heavy

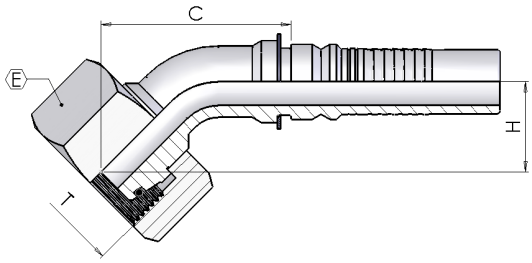

Part number	Hose I.D.		Dimensions					
			dash	Thread		Cut-Off	Hex	Drop
	in	mm	size	T	Erm	C	E	H
X0284H12-36	3/4	19.0	12	M36-2	25	94	46	31
X0284H16-36	1	25.4	16	M36-2	25	110	46	34
X0284H16-42	1	25.4	16	M42-2	30	112	50	33
X0284H20-52	1.1/4	31.8	20	M52-2	38	93	60	81

XS050H

ORFS Female

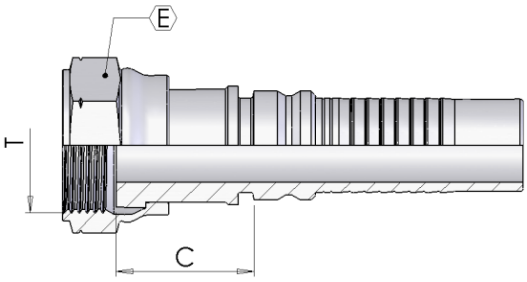

Part number	Hose I.D.		Dimensions			
			dash	Thread	Cut-Off	Hex
	in	mm	size	T	C	E
XS050H12-14	3/4	19.0	12	1.3/16-12	33	36
XS050H16-15	1	25.4	16	1.7/16-12	37	41
XS050H16-21	1	25.4	16	1.11/16-12	36	50
XS050H20-21	1.1/4	31.8	20	1.11/16-12	37	50
XS050H20-32	1.1/4	31.8	20	2-12	37	60
XS050H24-32	1.1/2	38.1	24	2-12	41	60

XS05TH

ORFS Female Back Hexagon

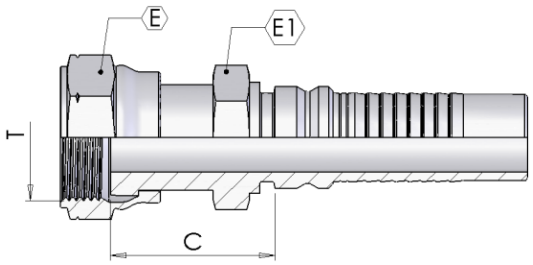

Part number	Hose I.D.		Dimensions				
			dash	Thread	Cut-Off	Hex	
	in	mm	size	T	C	E	E1
XS05TH12-14	3/4	19.0	12	1.3/16-12	39	36	30
XS05TH16-15	1	25.4	16	1.7/16-12	47	41	36
XS05TH20-21	1.1/4	31.8	20	1.11/16-12	50	50	46

XS150H

ORFS 90° Swept Elbow

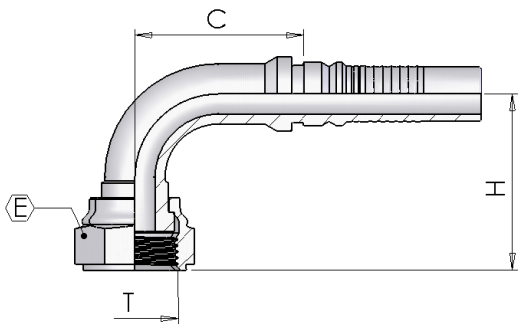

Part number	Hose I.D.		Dimensions				
			dash	Thread	Cut-Off	Hex	Drop
	in	mm	size	T	C	E	H
XS150H12-14	3/4	19.0	12	1.3/16-12	54	36	49
XS150H16-15	1	25.4	16	1.7/16-12	69	41	66
XS150H20-21	1.1/4	31.8	20	1.11/16-12	87	50	80
XS150H24-32	1.1/2	38.1	24	2-12	111	60	102

XS250H

ORFS 45° Swept Elbow

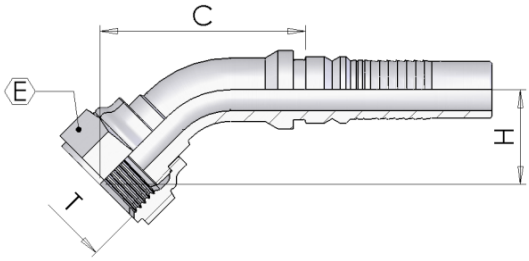

Part number	Hose I.D.		Dimensions				
			dash	Thread	Cut-Off	Hex	Drop
	in	mm	size	T	C	E	H
XS250H12-14	3/4	19.0	12	1.3/16-12	84	36	23
XS250H16-15	1	25.4	16	1.7/16-12	107	41	33
XS250H20-21	1.1/4	31.8	20	1.11/16-12	130	50	37
XS250H24-32	1.1/2	38.1	24	2-12	165	60	50

XS350H

ORFS Male

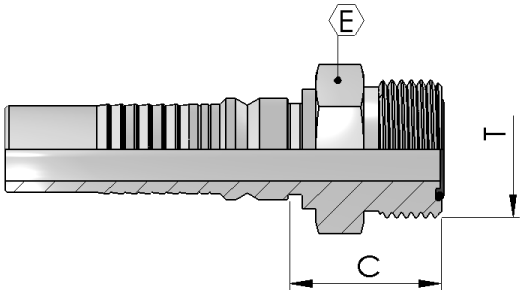

Part number	Hose I.D.		Dimensions			
			dash	Thread	Cut-Off	Hex
	in	mm	size	T	C	E
XS350H12-14	3/4	19.0	12	1.3/16-12	34	32
XS350H16-15	1	25.4	16	1.7/16-12	35	38
XS350H20-21	1.1/4	31.8	20	1.11/16-12	36	46

X1250H

Straight SAE Flange 3000 PSI

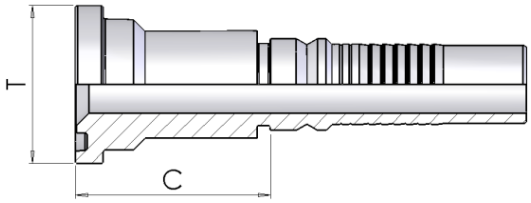

Part number	Hose I.D.		Dimensions			
			dash	Flange		Cut-Off
	in	mm	size	T	mm	C
X1250H12-12	3/4	19.0	12	3/4	38.1	47
X1250H12-16	3/4	19.0	12	1	44.5	50
X1250H16-16	1	25.4	16	1	44.5	52
X1250H16-20	1	25.4	16	1.1/4	50.8	55
X1250H20-20	1.1/4	31.8	20	1.1/4	50.8	56
X1250H20-24	1.1/4	31.8	20	1.1/2	60.3	59
X1250H24-24	1.1/2	38.1	24	1.1/2	60.3	60
X1250H24-32	1.1/2	38.1	24	2	71.4	65
X1250H32-32	2	50.8	32	2	71.4	67

X1050H

90° SAE Flange 3000 PSI

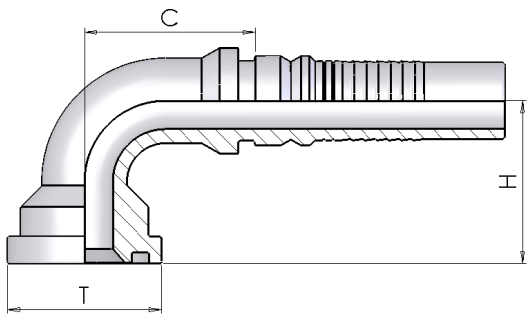

Part number	Hose I.D.		Dimensions				
			dash	Flange		Cut-Off	Drop
	in	mm	size	T	mm	C	H
X1050H12-12	3/4	19.0	12	3/4	38.1	52	52
X1050H12-16	3/4	19.0	12	1	44.5	55	56
X1050H16-16	1	25.4	16	1	44.5	73	65
X1050H16-20	1	25.4	16	1.1/4	50.8	69	71
X1050H20-20	1.1/4	31.8	20	1.1/4	50.8	93	78
X1050H20-24	1.1/4	31.8	20	1.1/2	60.3	97	80
X1050H24-24	1.1/2	38.1	24	1.1/2	60.3	100	95
X1050H24-32	1.1/2	38.1	24	2	71.4	134	101
X1050H32-32	2	50.8	32	2	71.4	122	121

X1150H

45° SAE Flange 3000 PSI

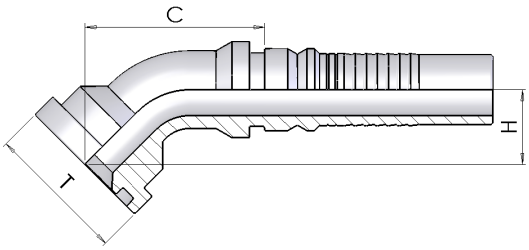

Part number	Hose I.D.		Dimensions				
			dash	Flange		Cut-Off	Drop
	in	mm	size	T	mm	C	H
X1150H12-12	3/4	19.0	12	3/4	38.1	81	25
X1150H12-16	3/4	19.0	12	1	44.5	86	28
X1150H16-16	1	25.4	16	1	44.5	107	35
X1150H16-20	1	25.4	16	1.1/4	50.8	113	37
X1150H20-20	1.1/4	31.8	20	1.1/4	50.8	136	37
X1150H20-24	1.1/4	31.8	20	1.1/2	60.3	136	40
X1150H24-24	1.1/2	38.1	24	1.1/2	60.3	159	44
X1150H24-32	1.1/2	38.1	24	2	71.4	159	47
X1150H32-32	2	50.8	32	2	71.4	182	56

X1300H

Straight SAE Flange 6000 PSI

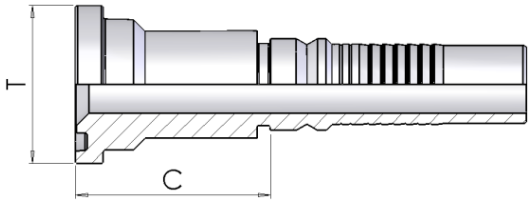

Part number	Hose I.D.		Dimensions			
			dash	Flange		Cut-Off
	in	mm	size	T	mm	C
X1300H12-12	3/4	19.0	12	3/4	41.3	51
X1300H12-16	3/4	19.0	12	1	47.6	57
X1300H16-12	1	25.4	16	3/4	41.3	52
X1300H16-16	1	25.4	16	1	47.6	59
X1300H16-20	1	25.4	16	1.1/4	54	66
X1300H20-16	1.1/4	31.8	20	1	47.6	60
X1300H20-20	1.1/4	31.8	20	1.1/4	54	67
X1300H20-24	1.1/4	31.8	20	1.1/2	63.5	73
X1300H24-20	1.1/2	38.1	24	1.1/4	54	75
X1300H24-24	1.1/2	38.1	24	1.1/2	63.5	74
X1300H24-32	1.1/2	38.1	24	2	79.4	82
X1300H32-32	2	50.8	32	2	79.4	84

X1100H

90° SAE Flange 6000 PSI

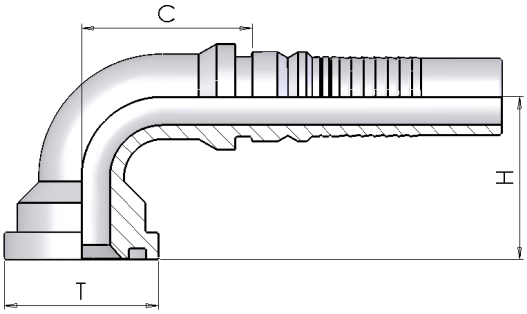

Part number	Hose I.D.		Dimensions				
			dash	Flange		Cut-Off	Drop
	in	mm	size	T	mm	C	H
X1100H12-12	3/4	19.0	12	3/4	41.3	53	55
X1100H12-16	3/4	19.0	12	1	47.6	52	63
X1100H16-12	1	25.4	16	3/4	41.3	73	66
X1100H16-16	1	25.4	16	1	47.6	74	72
X1100H16-20	1	25.4	16	1.1/4	54	73	79.5
X1100H20-16	1.1/4	31.8	20	1	47.6	93	80
X1100H20-20	1.1/4	31.8	20	1.1/4	54	93	84,5
X1100H20-24	1.1/4	31.8	20	1.1/2	63.5	98	90
X1100H24-24	1.1/2	38.1	24	1.1/2	63.5	114	101
X1100H24-32	1.1/2	38.1	24	2	79.4	115	115
X1100H32-32	2	50.8	32	2	79.4	124	138

X1200H

45° SAE Flange 6000 PSI

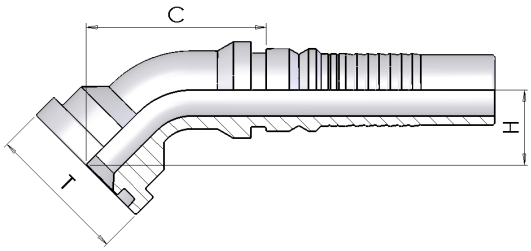

Part number	Hose I.D.		Dimensions				
			dash	Flange		Cut-Off	Drop
	in	mm	size	T	mm	C	H
X1200H12-12	3/4	19.0	12	3/4	41.3	85	28
X1200H12-16	3/4	19.0	12	1	47.6	88	34
X1200H16-12	1	25.4	16	3/4	41.3	107	35
X1200H16-16	1	25.4	16	1	47.6	112	34
X1200H16-20	1	25.4	16	1.1/4	54	117	40
X1200H20-16	1.1/4	31.8	20	1	47.6	117	42
X1200H20-20	1.1/4	31.8	20	1.1/4	54	139	43
X1200H20-24	1.1/4	31.8	20	1.1/2	63.5	144	48
X1200H24-24	1.1/2	38.1	24	1.1/2	63.5	167	50
X1200H24-32	1.1/2	38.1	24	2	79.4	166	64
X1200H32-32	2	50.8	32	2	79.4	200	72

Analytical Index

X0001 10
X001C 8
X0002 11
X0003 12
X004H 15
X004N 66
X0007 13
X0008 13
X0009 14
X0013 66
X0022 9
X0035 35
X0050H 68
X0051 18
X0052 19
X0061 16
X0062 16
X0084 43
X0084H 72
X0085 38
X0085 39
X0135 36
X0150 20
X0150H 68
X0151 20
X0152 21
X0184 44
X0184H 72
X0185 40
X0185 40
X0235 36
X0250 22
X0250H 69
X0251 22
X0252 23
X0284 45
X0284H 73
X0285 41
X0285 41
X0345 15
X0350 17
X0350H 67
X0360 24
X0370 27
X0370H 67
X0400 34
X0450 42
X0450H 71
X0500 37
X0550 48
X0650 49
X0750 50
X0850 28
X0850H 69
X0900H 70
X0901 29
X0902 30
X0950 31
X0950H 70
X0951 30
X0952 31
X1000 32
X1000H 71
X1001 32
X1002 33
X1050H 76
X1060 57
X1100H 79
X1110 60
X1150H 77
X1160 58
X1200H 80
X1210 61
X1250H 76
X1260 56
X1300H 78
X1310 59
X1350 46
X1400 25
X1600 26
X1600-00 25
X1650 47
XBMC1 11
XBMC2 12
XD050 62
XFK50 51
XPTFE 14
XS003 58
XS05TH 74
XS006 62
XS050 53
XS050H 73
XS150 54
XS150H 74
XS250 55
XS250H 75
XS350 52
XS350H 75

INTERPUMP
FLUID SOLUTIONS

Powered by I.M.M. Hydraulics

I.M.M.® HYDRAULICS

I.M.M. Hydraulics Spa
interpumpfluidsolutions.com

Via Italia, 49-51
66041 - Atessa (Ch) - Italy
T. +39 (0) 0872 889225
F. +39 (0) 0872 889226

CAT-IFS-I rev. 1.1